JOSEPH MILLER

OF

Newton, Massachusetts

SPENCER MILLER

No. CS 71.M65 1942

GIVEN BY

Spencer Miller, Sr.

The Public Library of the City of Boston
with the Compliments
of the author
Spencer Miller 3rd
Sept. 1943

Digitized by the Internet Archive
in 2011 with funding from
Boston Public Library

http://www.archive.org/details/josephmillerofne00mill

JOSEPH MILLER
OF NEWTON, MASSACHUSETTS

HIS DESCENDANTS IN AMERICA AND HIS
ANCESTRY IN BISHOP'S STORTFORD,
HERTFORDSHIRE, ENGLAND

Two hundred and fifty copies of this Historical and Genealogical Record have been privately printed

This is Number 57

"DANE O'COYS" AT BISHOP'S STORTFORD

The home of the Miller Family from 1570 to 1660

JOSEPH MILLER

OF

NEWTON, MASSACHUSETTS

HIS DESCENDANTS IN AMERICA
AND HIS ANCESTRY IN ENGLAND

By SPENCER MILLER

Doctor of Engineering
Member of New York Genealogical
and Biographical Society
New England Historical and Genealogical Society

NEW YORK
PRIVATELY PRINTED
1942

*CS71
.M65
1942

Reprinted from THE RECORD of the New York Genealogical and Biographical Society for April, 1939 through July, 1940

together with some additions and corrections with the permission of the Editor

Copyright, 1942, by Spencer Miller

Printed in the United States of America

JOSEPH MILLER

of

NEWTON, MASSACHUSETTS

HIS DESCENDANTS IN AMERICA

AND HIS ANCESTRY

AND THE ANCESTRY OF HIS SISTERS

ELIZABETH HEATH MILLER

AGNES OR ANN MILLER BURNAP

MARGARET MILLER STONARD WATERMAN

OF ROXBURY, MASSACHUSETTS

AND OF HIS COUSIN

THOMAS MILLER

OF

MIDDLETOWN, CONNECTICUT

FOREWORD

At no time in our American history have we as a people become more conscious of our great political, cultural and spiritual debt to England. From Magna Charta to the Bill of Rights; from the Mother of Parliaments to the Congress of the United States; from Shakespeare to Longfellow; from Westminster Abbey to the Washington Cathedral the line of descent is direct and unbroken. Our law, our literature, our language, and our love of liberty are an inheritance from our English forebears. It is logical, therefore, that the descendants of the original settlers in New England should seek to learn more of their forebears and their inherited characteristics. But the task of tracing the genealogical history from Old England to the New World has been made difficult by the fugitive character of many of the old records and by the errors in some of the earlier genealogies.

For many years now I have sought to discover the immigrant ancestors of Joseph Miller of Newton, Massachusetts. The task proved to be a particularly baffling one, due to certain inaccuracies in the existing genealogical records of this period, and due also to the inaccessibility of certain important data.

There remained, therefore, the twofold task: one to correct certain errors in these records, and, second, to establish beyond the peradventure of doubt the immigrant ancestor of the Joseph Miller family. This I have been able to do. As an example of the misleading information about this Miller family, there is contained in Cutter's *New England Families* a Miller genealogy which was published in 1913 (page 57). The author of this work begins his genealogy of the Millers of Bishop's Stortford, especially the reference to the ancestry of Thomas Miller of Middletown, with Thomas Miller and wife Bridget, daughter of Thomas Jernegan. This has not been proved.

A John Miller in his will, 1601, mentions the purchase of land from Mr. Jernegan, but the Bishop's Stortford Parish Register contains no record of any such marriage nor any indication of any union between any Jernegan and any Miller before 1640. Reference is made to Agnes Miller as the wife of John Denison. This information was accepted by your compiler for many years and to confirm the union he made a search and found that John Denison married Agnes Willie. In the compiler's article in THE RECORD of the New York Genealogical and Biographical Society for January 1936, there is a transcription from the Thorley Parish Register, that on May 11, 1561 "John Denison married Agnes Willie." Cutter said that Bridget Miller was the wife of George Abbot. Bridget Willie married George Abbot. Cutter said that John Miller, son of Thomas, married Elizabeth Jardfield. No marriage of any Miller to any Jardfield has been found in the Parish Register of Stortford. The wife of John[3] Miller, son of John[2], was Elizabeth Meade.

Evident misinformation appears by crediting to Bishop's Stortford the birthplace of the Rev. John Miller, born 1604, graduate of Cambridge University 1627 and dying in Groton, 1663. This conflicts with the Cambridge University *Alumni Catalogue* which records the birth of Rev. John Miller, born 1604, as of Ashford, Kent, and the son of Martin Miller.

A similar genealogy appeared in the *Miller Family Magazine* for Jan., 1917, prepared by Elbert H. T. Miller, Scottsville, N. Y. Mr. Elbert Miller is a widely recognized authority on the Millers of Conn. Possibly he too was misled by the Cutter *Miller Genealogy* (1913).

Another example of apparent misinformation is found in an ambitious volume entitled *The Miller Family of America.* The author must have been misled for he declares that Thomas Miller of Middletown was the brother of the Rev. John Miller of Cambridge University, Roxbury and Yarmouth and who died in Groton.

The author of *Miller Family of America* claims that Martin Miller was the father of John, Thomas, William, Nathan or Simon, George and Joseph and furthermore quite openly names the wife of Martin Miller as "Priscilla" (page 52) in these words: "Martin Miller, a weaver, and his wife, *whom we will call* Priscilla."

In 1925 when the compiler of this article was searching for the English parents of Joseph Miller he requested the late Mr. Bower Marsh, then owner of Phillimore & Co., Ltd., of London, publishers of genealogical books, to personally visit Ashford, co. Kent, and make a transcription of the family of Martin Miller. His reply follows:

"London, 1 Feb. 1926.

Dear Mr. Spencer Miller,

Following your instructions I have searched the Ashford Registers & enclose the results:

Transcription from Parish Registers

1598 May 12, Martin Miller & Susan Hicks, mar.
1601 Dec. 20, Samuel sonne of Martin Miller, bap.
1602 Mch. 20, Stephen " " " " "
1604 Oct. 21, John " " " " "
1605 Feb. 9, Marye dau. " " " " "
1609 Jan. 24, Mathia sonne " " " " (who died in 1610)
1610 Oct. 29, Mathias " " " " buried
1614 Apr. 17, Deborah dau. " " " bap.

I searched from 1620 back to 1600 and as I found no Richard or Joseph did not go further back, except to look for baptism of Martin which I did not find.

Yours very faithfully,

(signed) Bower Marsh."

This transcription would seem to be adequate testimony that Martin Miller was *not* the father of any Thomas Miller, William Miller, Nathan or Simon Miller, Joseph Miller and George Miller, all claimed as sons of Martin in *The Miller Family of America*, pages 58, 59, 60 and 61.

Furthermore it would appear to be adequate proof that Thomas Miller of Middletown, Conn., was *not* a brother of the Rev. John Miller, graduate of Cambridge University, town clerk in Rowley, Mass., minister at Yarmouth, who died at Groton.

And again that the Rev. John Miller, son of Martin Miller and Susan Hicks, was *not* born in Bishop's Stortford.

The positive task of establishing the correct English ancestors of Joseph Miller proved to be a long and difficult one. It has required years of research in both England and this country to gather together all the missing links until the record is now complete and the descent of this Miller family has been established from John Miller who died 1554/5 of Bishop's Stortford to the present time.

The story of Joseph Miller, then, must logically begin with John[1] Miller (d. 1554/5), John & Joan (Thoroughgood) Miller (d. 1584) and "Maister" Thomas Miller, Master of Arts (Cambridge 1588), who raised a family of thirteen children on a 90-acre tract called Dane O'Coys, Bishop's Stortford, County Herts, which he had inherited from his father in 1584. (Appendix 2, 5.)

"Maister" Thomas Miller was a country gentleman and highly educated. The terms of his will in 1627 provided that Dane O'Coys was to pass down to his "eldest son," Thomas Junior. But his widow, Agnes, had a life interest and lived until 1643. Thomas Miller, Jr., "eldest son," never had possession. He had married a year before his father died and after 1627 had a son Thomas III, and two daughters, Mary and Anne. He died 1640 and his son Thomas III became heir to Dane O'Coys. Widow Agnes Miller mother of Thomas Jr. died 1643, at which date Dane O'Coys belonged to Thomas Miller III, ten year's old.

Hester (Cramphorne) Miller, the mother of Thomas Miller III was executrix and Daniel Cramphorne, her brother, was a trustee of the estate.

When Thomas III grew up, he married Susan Thurgood (1652) and both died without issue before 1665. (Par. Reg., Sabridgeworth, co. Herts.)

During the period of Charles I's experiment in personal government in the thirties of the Seventeenth Century not only political and religious but economic conditions compelled some ten thousand people to leave England for New England. The emigrants included at least four members of the family of "Maister" Thomas Miller, Gent. These four emigrated to Roxbury, namely, Elizabeth (Miller) Heath, born 1593, wife of Isaac Heath of Amwell; Agnes or Anne (Miller) Burnap, born 1600, wife of Robert Burnap, also of Amwell; * Margaret (Miller) (Stonard) Waterman, born 1603, (1) wife of John Stonard and (2) wife of Thomas Waterman, married after 1649, of Roxbury; and Joseph Miller, 13th child, born 1616. All these landed in Roxbury, New England, William Denison, his wife Margaret Chandler (a cousin of the Millers), and sons Daniel, Edward, and George, and their old grandmother, Agnes Willie (Denison) Gace, preceded the Millers of Bishop's Stortford and emigrated in 1631 to Roxbury with the Rev. John Eliot of Nazing (Co. Essex).

William Heath of Nazing with his 2d wife Mary (Cramphorne) Heath and their children Peleg, Mary, and Hannah migrated to Roxbury in 1632. William and Isaac Heath were brothers.

Elizabeth Miller was the mother of a daughter Elizabeth Heath, who married John Bowles, a "Ruling Elder" of Roxbury, and emigrant ancestor of a long line of distinguished men bearing the name of Bowles.

Agnes Miller was the mother of Isaac and Thomas Burnap, ancestors of many distinguished men, some of whom changed their name to Burnet.

Margaret Miller left no children by her 2d husband, Thomas Waterman. (See Waterman Genealogy.)

Joseph Miller, the boy pioneer, solved his economic problem by marrying Mary Pope, sole heiress of the home of her father, Walter Pope of Charlestown. They raised a good-sized family in Newton, Mass.; the next three generations of Millers moved to Worcester, Mass.

The predominant trait of interest in church and education has been a characteristic of seven generations of this Miller family in America. Joseph Miller's father, grandfather and great-grandfather were all church wardens in Bishop's Stortford and, in a straight line of his Miller descendants concern with church and education was and is a paramount characteristic. All but one of these were deacons, ministers, elders or wardens. Among them we find membership on school boards, petitioners for schoolhouses, educators, college professors and tutors, and donors of land for school purposes.

Undoubtedly these four members of the Thomas Miller family of Bishop's Stortford were prompted to emigrate to New England chiefly for economic reasons. I am supported in this contention by Miss E. M. Tenison, the English historian, who has read a part of my manuscript. Her conclusion was that Joseph Miller emigrated to New England prompted by an adventurous spirit and not to escape persecution.

About 1925 I secured a copy of the will of Thomas Miller, M.A., of Bishop's Stortford; also the transcription of all Miller entries in the Parish Register from which I was enabled to discern the similarity of family names given children baptized in England, and also children baptized in New England. The continuity of names was one of the major reasons for accepting Joseph Miller of Bishop's Stortford as my ancestor. In 1928 I announced in the *Compendium of American Genealogy* that Joseph Miller was my ancestor. This announcement has not been challenged since my article entitled "Millers of Bishop's Stortford" appeared in the RECORD of the New York Genealogical & Biographical Society 1939–40 containing the documentary proofs.

SPENCER MILLER

Laguna Beach, California
1941

* Margaret Miller's first husband was John Stonard m. 1631 in London. He died 1649.

ACKNOWLEDGMENTS

The genealogical record of Joseph Miller of Newton, Massachusetts, in America and his ancestry in Bishop's Stortford, Hertfordshire, England, which is set forth in this volume represents eighteen years of genealogical research in the New York Genealogical and Biographical Society, the Massachusetts Historical Society, the New England Historic Genealogical Society of Boston, the New York Historical Society, the Newberry Library in Chicago, the D. A. R. Library of Washington, the Congressional Library and in such public libraries as New York, Boston, Chicago, Detroit and Los Angeles, etc. In addition, my researches included two trips to England to examine very old wills at Somerset House, London, and manuscripts and books in the British Museum.

During a three months' residence in Bishop's Stortford in 1931, I was enabled to examine old real estate parchments, Church Wardens' accounts, and the Parish Registers of 30 parishes adjacent to Stortford, together with the Court Rolls at Hadham Hall (Little Hadham) through the courtesy of the late Mr. William Minet, the owner, to whom I owe a very great debt.

The parish of Bishop's Stortford (population about 1000 in 1635), in the county of Herts, is on the borders of Essex county and thirty-two miles north of London.

The account, then, which is here presented for the first time in any exhaustive form, represents the labors of eighteen years. But it would have been a difficult accomplishment without the generous coöperation and helpful services of many friends and associates. To each of these I desire to make acknowledgment.

In Bishop's Stortford I had the generous assistance of Mr. and Mrs. Tresham Gilby, present owners of Dane O'Coys, the home of the Miller family from 1570 for nearly 100 years; the Rev. William McCarty, Vicar of St. Michael's Church, in searching the Parish Records; and the late J. L. Glasscock, Jr., genealogist and antiquarian. His transcript of the Parish Register of St. Michael's Church, Bishop's Stortford listing Baptisms from 1561 to 1662—Burials from 1561 to 1680—Marriages from 1561 to 1711; and Glasscock's *Records of St. Michael's Church*, a gift to me from Mr. H. Boardman, publisher, have proved invaluable sources of information, especially in connection with *Herts Genealogist and Antiquary* in three volumes. In addition, Dr. A. T. Butler the Windsor Herald, the late Mr. Bower Marsh of Phillimore & Co., and Miss Lucy Drucker, all of London, and other English genealogists have facilitated my searches at special points.

To Eva Mabel Tenison, the distinguished English historian and Elizabethan scholar, I desire to extend my grateful thanks for reading a part of this manuscript and her conclusion that Joseph Miller emigrated to New England prompted by "an adventurous spirit" and not "to escape persecution." Miss Tenison, who has lived in Hatfield Regis, knows Stortford well.

In the United States, Mr. George W. Chamberlain of Malden, Mass., made exhaustive searches among New England records to establish the identity of Joseph Miller of Charlestown and Newton, who came to Cambridge and Roxbury on the *Hopewell* in 1635, and subsequently settled in Newton, Mass. In preparing this genealogical record I have leaned heavily upon Mr. Howard S. F. Randolph, now of La Jolla, California, and one-time (1926–1935) assistant librarian and associate editor of N. Y. Genealogical and Biographical Society. My son Spencer Miller Jun'r has been of great and invaluable aid during the compilation of this entire volume.

There are others too numerous to mention by name, who have collaborated in my researches, to whom I make this record of indebtedness. But I alone am responsible for the conclusions reached. If, as a result of my years of work, another link is fashioned between Old England and New England, and the descendants of Joseph Miller of Stortford are enabled thereby to trace a continuous line of descent, I shall feel in part repaid for my labors.

S. M.

CONTENTS

PAGE

FOREWORD ix

ACKNOWLEDGMENTS xiii

THE CHART OF THE FAMILY OF THOMAS MILLER, GENT. OF BISHOP'S STORTFORD xvii

THE MILLERS OF BISHOP'S STORTFORD i

The John Miller Branch in Bishop's Stortford 1
The William Miller Branch in Bishop's Stortford 2
Thomas Miller of Middletown, Connecticut 3
William Miller of Bishop's Stortford 4
Millers and Johnsons 4
Family of Thomas Miller, Gent. 5
Facts about Joseph Miller of Bishop's Stortford 9
1631 Exodus 9
1632 Exodus 9
Relationship of Joseph Miller of Stortford to Isaac and William Heath of Roxbury, Mass. 10
Cramphorne Family of Sabridgeworth 11
St. Michael's Church—A Focal Center 11
Schoolmates or Churchmates of Joseph Miller 12
The Miller Family in 1635 at Dane O'Coys, Bishop's Stortford . . 12
Joseph Miller Emigrant 14
Joseph Miller's Inheritance 15
The Identity of Joseph Miller and His Sisters, Elizabeth, Anne, and Margaret Miller 15
The Will of Elizabeth (Miller) Heath 17
Summary 19

JOSEPH MILLER OF NEWTON, MASSACHUSETTS, AND SOME OF HIS DESCENDANTS 23

APPENDICES 35

THE SEVENTH GENERATION OF MILLERS IN AMERICA—A SUPPLEMENT . 49

INDEX OF NAMES 59

THE FAMILY OF THOMAS MILLER, GENT., OF BISHOP'S STORTFORD

First Generation	Second Generation		Third Generation	
	Child	Consort	Child	Consort
Thomas Miller M.A. b about 1560	ELIZABETH bp Mar 2 1593/4 d Jan 1 1664	ISAAC HEATH b 1585 m 14 Jan. 1629 em 1635	ELIZABETH b 1630 m Apr. 2. 1650 d 1655	John Bowles d 1680 Sep. 21
buried May 23 1627	Thomas Jr bp May 18 1595 m May 8 1626 d 1640	Hester Cramphorne bp Jan 30 1597	Mary 1629	
			Anne 1630	
married (date unknown)			Thomas 1633	Susan Thurgood m Oct. 1 1652
Agnes —— d Aug 8 1643 [possibly but not necessarily a second wife]	Joan bp Dec 5 1596 d 1630/1	(Edward) Marshall		
	John bp May 2 1598 d after 1680	Elizabeth —— b bur Sep 17 1678	John 1635 d.y.	
			Mary 1636	Charles Veere
			John 1639	Anne Fowler
	AGNES or ANN bp May 3 1600 m ab 1624 d Apr 27 1681	ROBERT BURNAP b em 1638 d Sep 27 1689	THOMAS 1625	
			Anne 1626–1629	
			ROBERT 1627–1695	
			ISAAC 1630–1667	
			ANNE 1632–1695	John Wight Isaac Bullard David Jones
			dau. 1634 d inf.	
			EDWARD 1635/6	
			Richard d.y.	
			Infant	
			Sarah ab. 1646 m (1) 1668/9	John Southwick Thomas Cooper Cornelius Brown
	Rev. Edward bp Oct 25 1601 m 1 Dec 26 1648	Ann Hawkshead b	Rev. Edward 1649	
			Rev. Richard 1651	
	MARGARET bp Oct 2 1603 m 1 1631 m 2 after 1649 d 1682/3	JOHN STONARD b ab 1600 d Aug 13 1649	Alice b ab 1632 m Apr 8 1653	Anthony Shaw
			JOSEPH b ab 1633	Eliz. Spencer m ab 1667
		THOMAS WATERMAN d Jan 22 1675		
	William bp Apr 7 1605 m May 1 1635	Ann Ward		
	Isaac bp Jan 8 1608/9			
	Mary bp Feb 18 1609/10			
	George bp May 10 1612 m	Elizabeth —— b d Aug 29 1665	John 1639–1640	
			John 1641	
			Anne 1644	
	Daniel bp Mar 25 1614			
	JOSEPH bp Dec 30 1616 em 1635 m before 1660 d Nov 28 1697	Mary Pope b ab 1631–2 d Mar 14 1710	Joseph 1661–1710	unm
			Jane 1663–1719	unm
			Anna 1666–1741	unm
			Elizabeth 1670	John Park
			Thomas 1675–1713	Eliz. Fuller Experience Fuller
			Samuel 1678–1759	Eliz. Child

NOTE.—Names in CAPITALS are of persons who emigrated from England to New England.

H. S. F. R.

THE MILLERS OF BISHOP'S STORTFORD

THE MILLERS OF BISHOP'S STORTFORD

THE JOHN MILLER BRANCH IN BISHOP'S STORTFORD

1. JOHN[1] MILLER, born before 1508; made his will in Bishop's Stortford, June 14, 1551, which was proved Feb. 13, 1554/5 (Appendix 1). In the Church Wardens' accounts of St. Michael's Church in 1540 is found an item as follows: "Receyved of John Myller and John Smyth for the stok of our Lady Yeld 11j Ii VIIIjd." It is supposed to refer to the dissolution of the Guild of the Virgin Mary. Miller lived in Crooked Lane in Stortford and his wife was KATHERINE ——. He was assessed a Lay Subsidy tax in Stortford, Oct. 27, 1545 (of 13s. 4d.). (*Herts Genealogist and Antiquary*, 2:277). He was a church warden, 1540.

Children:

+ 2. i. JOHN[2], to have remainder (after his mother's death) outside the North Gate in Stortford, June 14, 1551.

+ 3. ii. WILLIAM[2], eldest son and executor with his mother and to have remainder of his father's estate, June 14, 1551; alive July 4, 1584, d. Apr. 12, 1592.

There were five sisters (possibly sisters-in-law) of John[2] living May 18, 1584.

SUSANNA, perhaps a daughter of William, bapt. in Stortford, Oct. 25, 1563.

ELIZABETH, perhaps a daughter of William, bapt. in Stortford, July 30, 1570.

2. JOHN[2] MILLER (John[1]) received a part of his father's estate outside the North Gate in Stortford 14 June 1551. He was called "the elder" of two at the time he made his will, 18 May 1584, which was proved 31 Oct. 1584 (Appendix 2). He was buried in Bishop's Stortford, 4 July 1584. He was assessed in the Subsidy, 1 May 1563, in Stortford on goods valued at £8 a tax of 13s. 4d. He was assessed 20 Feb. 1566/7, on goods valued at £8, a tax of 8s. In the Subsidy of 18 Oct. 1571, his valuation was £8 and his tax was 13s. 4d. He married about 1558 JOHAN THURGOOD, daughter of John[2] Thurgood of Stortford. She was buried as a widow in Stortford 3 Nov. 1590.

He owned a butchery in Stortford and bequeathed the houses "wherein I now dwell" and his dovehouses at Hockerell Bridge to his wife Joan. His son John was to have the houses "between my dwelling and the mill", his barn at the North Gate, his Lynchwell meadow and the "croft my father gave me at Waight's Cross and my tenement at Hockerell Bridge and another Tenement in Stortford in the Butchery he paying my wife Johan £20 a year for life." To his son Thomas "my messuage called Dayne of Coyffes [Dane O'Coys] in Stortford which I bought of my father-in-law John Thurgood and my brother-in-law John Thurgood and his wife." To his daughter Lucy he gave a messuage in Little Hadham at marriage or at the age of 21. To George Hawkins, "my daughter Mary's child, £10." He also made bequests to Agnes Thurgood, daughter of his brother-in-law Nicholas and to his brother William Miller, 40s. To his five sisters (not named) he gave 20s. each. To his son John "my part of Stansted Park," he to be executor. His wife's brother, Nicholas Thurgood, to be overseer.

His widow, Johan Miller of Stortford, made her will, 5 Oct. 1590, which was proved 19 Dec. 1590 (Appendix 3). She mentions her son Thomas Miller to have her young corn at Dane Acoyas (Dane O'Coys), seven silver spoons and a chest in which his father kept his writings; her daughter Mary, the children of her son John, her brother's daughter Annis Thurgood and her brother Nicholas Thurgood. They lived at Dane O'Coys, three-quarters of a mile from the center of Stortford.

The children of John[2] Miller, born in Stortford:

+ 4. i. John[3], b. before 1561.
+ 5. ii. Thomas[3], b. before 1561.
iii. Lucy[3], unmarried, 18 May 1584, perhaps buried 10 Sept. 1585; probably mar. 2 Aug. 1584 John Harvey of Little Hadham. Several Harvey names appear in Parish Register, and in 1608 John Harvey, gent., was buried.
iv. Mary[3], bp. 11 Feb. 1561/2; mar. in Stortford, 22 July 1581, George* Hawkyn (son of George Hawkin prop. "George Inn" in Stortford).

THE WILLIAM MILLER BRANCH IN BISHOP'S STORTFORD

3. WILLIAM[2] MILLER (John[1]), "eldest son", born about 1530, probably in Stortford. He was a constable in 1566, a Collector for the Poor in 1566 and was paid 4s. 4d. In 1558 he paid to the church 15d. He was church warden 1560–61. His subsidy in 1563 was £9 15s. paid in goods; in 1566, £7 7s.: in 1571, 20s.

(*Feet of Fines*)—In 1581 William Miller, Senior, John Miller and George Hawkyn, Junior, bought land in Stortford from Paul Connyngton and Anne his wife and George Jacobe and John Jacobe.

William[2] Miller, "eldest son" of John[1] and Katherine Miller, died in 1592 and was buried in Stortford 12 April 1592. Most of his children were probably born in Stortford before the Parish Register was introduced in 1561, but only one can be accounted for, and he must have been born about 1560—hence the following:

i. John[3], born about 1560.
ii. Susanna[3], bp. 8 Nov. 1562 (Parish Register).

JOHN[3] MILLER (William[2], John[1]) of Bishop's Stortford was called "Junior," "Long John," "Senior" and "The Elder." Born about 1560, he died in Stortford and was buried 11 Oct. 1633, registered as "Sen." He married 21 Nov. 1585 MARY PYLSTON of Stortford. The Pylston family, one of the leading families of Stortford, dates back to 1517. William Pylston and a John Miller were church wardens in 1571. Mary Pylston Miller was buried in Stortford 6 April 1621, registered "wife of Long John Miller."

The children of John[3] and Mary (Pylston) Miller were as follows:

i. Johanna, bp. 11 Sept. 1586.
ii. Grace, bp. 2 Feb. 1588.
iii. John, bp. 7 Mar. 1590; d. Mar. 19, 1590.
iv. William[4], bp. 21 May 1592; m. Ellener Alliat (Eliot) Apr. 25, 1620. (*See page 4.*)
v. Anne, bp. 25 Aug. 1594.
vi. John, bp. 19 Apr. 1596; died an infant.
vii. John[4], bp. 10 Jul. 1597.
viii. Margaret, bp. 22 Oct. 1598.
ix. Elizabeth, bp. 20 Mar. 1601/2.
x. Leonard, bp. 22 Jul. 1606.
xi. Thomas[4], bp. 7 Nov. 1609. Prob. d. in Middletown, Conn., 1680, "above 70." (Savage, *Dict.*)

---

* The will of Johane Stafford, widow (of John Staverd of London who died 1582), dated Oct. 1614, pr. 8 Nov. 1614, was witnessed by "my brother George Hawkins the elder" (m. Mary Miller and had George Jr. 1582, and Thomas, Grace, Alice, and died 1620). The will provides for "my cousin Grace Hawkins, da. of my brother George, & my niece Alice Hawkins." Philip Felton, son of my da. (Katherine) Felton. To Philip Rogers, son of my da. Johane. To my da. Anne Broadstreet lands, houses &c in Stortford, Herts (Simon Brodstreet, son of Simon, bur. in Stortford 1619). (See pages 234 to 237, Waters' *Gen. Gleanings in England.*)

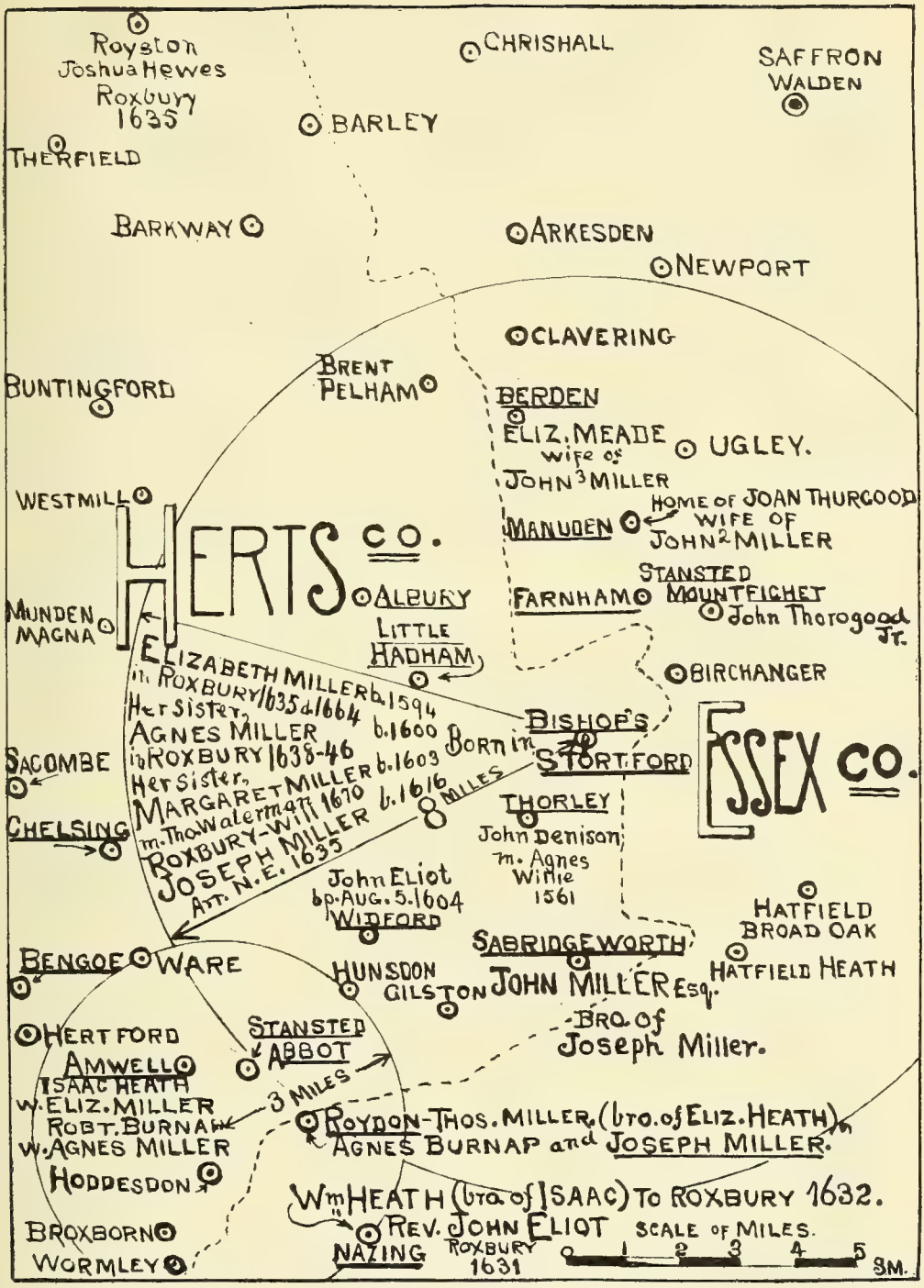

SKETCH MAP OF BISHOP'S STORTFORD AND VICINITY

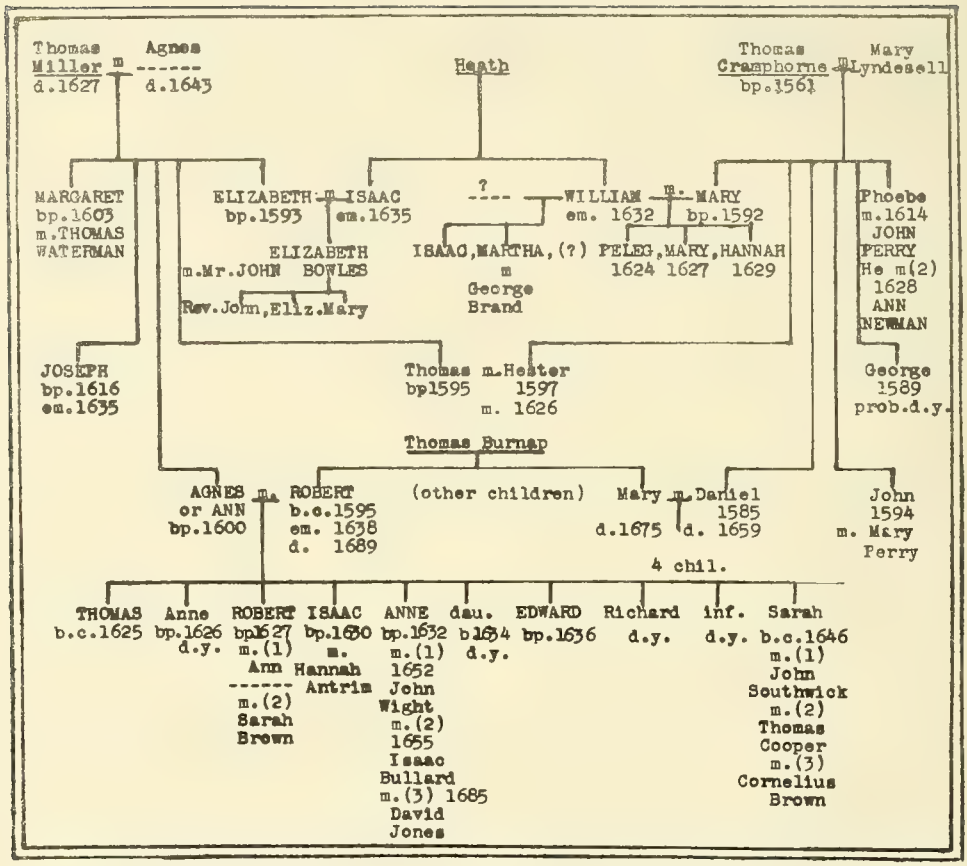

Note. Names in CAPITALS are of persons who emigrated to New England. All dates, unless otherwise stated, are dates of birth. em. - Emigrated.

Chart showing various relationships between the families of Millers of Bishop's Stortford, of Heaths of Nazing and Amwell, of Cramphornes of Sabridgeworth, and Burnaps of Amwell and Stansted Abbot.

John[3] Miller registered as "Sen[r]." married (secondly) 8 Jul. 1622 Agnes Chandler, the widow of Henry Chandler, who had died in 1618. She had no children by "Long John" Miller, and as wife of John "The Elder" she was buried 6 Dec. 1630. By this marriage "Long John" Miller became the stepfather of Agnes Chandler's children: among these was William Chandler, 27 years old, who had married Alice Thorowgood of Farnham (two miles north of Stortford), in 1621, and had daus. Eliza, bp. 1622 (d. 1636) and Sarah, bp. 1624 (d. 1626). William's wife Alice was bur. 15 June 1625. The following year he mar. (2nd) Agnes or Annis Bayford. In 1637 William and Annis Chandler migrated to Roxbury with four children—William, Hannah, John and Sara. Hannah Chandler m. George Abbott of Stortford and Roxbury (later Andover) in 1646. Son William Chandler m. Mary Dane, da. of Dr. John Dane of Stortford. (*N. E. Reg.*, April, 1931.)

THOMAS[4] MILLER OF MIDDLETOWN, CONN., 1609–1680

This second marriage of "Long John" Miller and widow Agnes Chandler in 1622 resulted in Agnes becoming the stepmother of all the Miller children, one of whom has special interest, notably Thomas Miller, born 7 Nov. 1609, then only 13 years old (1622). This Thomas Miller was the youngest son of "Long John" Miller living with his stepmother Agnes, until her death in 1630, when Thomas would be of age—21. Thomas Miller's father died three years later, leaving Thomas Miller an orphan 24 years old, doubtless fully capable of controlling his own movements.

At this date, 1633, his relatives, the Denisons, had been residents of Roxbury, Mass., for two years. William Denison of Stortford married Margaret Chandler (bapt. 1577), a daughter of Tobias and Joane (Momford) Chandler, an own cousin of William Chandler, a stepbrother of Thomas Miller (*N. E. Reg.*, April, 1931). Elizabeth (Miller) Heath of Roxbury after 1635 was a second cousin of Thomas Miller, son of "Long John" Miller.

With the intimate relationships between the Millers and Chandlers and Denisons, it would not be surprising that one or more of the sons of "Long John" Miller emigrated from Bishop's Stortford to the Massachusetts Bay Colony.

Several genealogists have credited Thomas Miller of Middletown to Bishop's Stortford, but none of them have identified "Long John" Miller as the son of William[2] Miller.

Others agree that in 1635 Thomas Miller arrived in Dorchester, remaining a short time and then moving to Rowley. From Rowley he went to Middletown. Holmes' *Directory of Ancestral Heads of New England Families* is quoted as follows: "Thomas Miller, carpenter, b. Eng. 1610, came from Birmingham to Dorchester 1635; removed to Rowley and in 1653 moved to Middletown, Conn."

From Clapp's *History of Dorcester* this is quoted: "Among the list who joined the new church in 1636 we find Tho. Miller;" also on page 130, "Joseph Miller from Dorchester settled in Camb. Village."

Thomas Miller removed to Rowley where "Thomas Miller sometimes spelled Mylner had an acre and a half house lot in 1643. He was licensed to draw wine (1647), paying 15s. annually. In 1651 he was of Rowley with his wife Isabel and was a carpenter. He soon removed to Middletown, Conn." (*Essex Inst. Coll.* Vol. 22, page 219.)

Thomas Miller of Middletown died at the age of 70 in 1680. In fact Thomas Miller died 69 years and 9 months after his baptism in Stortford, Nov. 7, 1609, and if he was baptized at the age of 3 months, then he died 70 years after his birth.

The *Connecticut Probate Records*, Hartford District, Vol. 3 and 4, contain a brief copy of his will, dated 11 Aug. 1680, in which the following appears:

"being something about 70 years of age." He refers to his daughter Anne, who had married Nathaniel Bacon, the child of his first wife Isabel who died in 1666, and according to Savage, "when above 56 years old married 6 June 1666 Sarah, daughter of Samuel Nettleton of Branford."

The children of Thomas Miller and his 2nd wife Sarah Nettleton appear in vital records as follows:

i. Thomas, bp. 6 May 1666, m. Elizabeth Turner 1688; d. 24 Sept. 1729.
ii. Samuel, bp. 1 Apr. 1668, m. Mary Eggleston 1702; he d. 1738.
iii. Joseph, bp. 21 Aug. 1670, m. Rebecca Johnson 1701 and d. Dec. 1717.
iv. Benjamin, bp. 20 Jul. 1672, m. Mary Johnson, b. 14 Feb. 1673 of Woodstock, Conn.
v. John, bp. 10 Mar. 1674, m. Marcy Beven 1700; d. 3 May 1745.
vi. Margaret, bp. 1 Sep. 1676, m. Isaac Johnson 1695, grandson of Capt. Isaac Johnson of Roxbury whom Eliz. (Miller) Heath in will 1664 calls "my cousin."
vii. Sarah, bp. 7 Jan. 1678.
viii. Mehitable, bp. 28 Mar. 1681.

By comparing the names of the children of Thomas Miller of Middletown with those of John Miller (his father) of Bishop's Stortford, it will be noted that the names Thomas, John and Margaret appear in both together with Samuel and Joseph, popular names in Bishop's Stortford Millers at that period.

WILLIAM MILLER OF BISHOP'S STORTFORD

William[4] Miller, son of "Long John"[3] Miller, bp. 21 May, 1592, married Ellener Alliat (Eliot) 25 Apr. 1620; died 23 Jan. 1656.

i. Mary, bp. 26 Oct. 1623; died 3 Nov. 1624.
ii. William, bp. 27 Dec. 1625; mar. and had John 1656 and William 1657.
iii. James, bp. 6 Oct. 1628.
iv. Richard, bp. 1 Mar. 1630.
v. Margaret, bp. 23 Jul. 1633.
A son, buried 4 Jul. 1633.
vi. Ann, bp. 14 Apr. 1636.

MILLERS AND JOHNSONS

That there was a close relation between Capt. Isaac Johnson of Roxbury and the Millers of Stortford and Roxbury is proven in the wills of both Elizabeth (Miller) Heath 1664, and Margaret (Miller) Waterman in 1670. Both called Capt. Johnson, "my cousin."

Some years later two granddaughters and one grandson of Capt. Isaac Johnson (children of Nathaniel) married two sons and one daughter of Thomas Miller of Middletown.

1. Benjamin Miller married Mary Johnson (da. of Nathaniel of Woodstock).
2. Joseph Miller married Rebecca Johnson (da. of Nathaniel of Woodstock).
3. Margaret Miller married Isaac Johnson (son of Nathaniel of Woodstock).

(See *Hist. of North Brookfield*, and Vital Records.)

This triple union is not proof, but it lends testimony that Thomas Miller of Middletown was "of Bishop's Stortford."

4. JOHN[3] MILLER (John[2], John[1]), born probably in Stortford, as early as 1560; buried there 12 Sept. 1612. He married in Stortford, 25 Apr. 1582,

ELLEN SPRENGER (SPRAUNGE). She was buried in Stortford, 11 June 1592. John married 2nd, Elizabeth Meade, da. of Edward and Agnes Meade of Berden, co. Essex, 1592/3.

He maintained a butchery and was assessed in 1593 "to defend the Kingdom" £20; in the Subsidy of 1609 on a value of £4 a tax of 5s. 4d. His widow Elizabeth was assessed 27 Mar. 1626 on value 20s., a tax of 4s., and again 9 Dec. 1628 on the same. This is the last mention of her that has been found.

In his will dated 26 Mar. 1601 and proved 9 Nov. 1612 (Appendix 5), he mentions his wife Elizabeth, his poor Aunt Holly, his son John, his daughter Agnes Miller, his daughter Sarah Miller, his daughter Katherine Miller, his brother (in-law) Richard Mead, his daughter Ursula, his son William, his three eldest daughters Joane, Margaret and Jane, his brother (in-law) John Meade, his brother Thomas Miller and his brother-in-law Richard Sprenger. The witnesses were George Hawkyn and Thomas Barnarde, Scrivener.

The children of John[3] Miller by his first wife, who were born in Stortford, were:

i. John[4], bp. betw. 17 Dec. 1583 and 5 Jan. 1583/4. His will is found in Appendix 7, his widow's in Appendix 10, his son John in Appendix 9.
ii. William[4], bp. 28 Nov. 1585; bur. 8 Oct. 1610.
iii. Johanne[4], bp. 21 Jan. 1587/8.
iv. Margaret[4], bp. 22 Feb. 1589/90.
v. Jane[4], bp. 26 Feb. 1591/2; m. 18 Sept. 1615, John Chandler of Stortford, bro. of Margaret (Chandler) Denison.

Children of the second wife, born in Stortford:

vi. Richard[4], bp. 15 July 1593. Not mentioned in will; probably died young.*
vii. Anne[4], bp. 25 Aug. 1594.
viii. Sara[4], bp. 17 Oct. 1596.
ix. Katherine[4], bp. abt. 1598; alive 26 Mar. 1601.
x. Ursula[4], bp. 1 Feb. 1600/1601.
xi. Mary[4], bp. 5 Dec. 1603.

Cussan's *History of Herts*, Vol. 1, page 8, gives a long list of persons assessed to "defend the Kingdom" in 1593. Only two residents of Bishop's Stortford appeared in this list, and one of them was John Miller, assessed £20.

NOTE.—*Will* of Agnes Meade, widow, of Berden, co. Essex, dated March 31, 1601, Commissary of London, Essex and Herts, gives "Elizabeth Miller, my daughter, £50. . . . John Miller, her husband. . . . To the four living children of my daughter (Elizabeth) Miller, Agnes, Sarah, Katherine and Ursula," omitting Richard, bp. July 1593 and Mary, bp. 5 Dec. 1603. Probably Richard died before 1601 and Mary was unborn in 1601. "My late husband Edward Meade, daughters Margaritte, Joane, Mary, Elizabeth and Agnes. . . . To my brother Richard Meade a ring of gold. . . . To Agnes Nobbes daughter of *my* daughter Margarrett. . . . Sons Richard, Nicholas, Reginald, Rienhold, Thomas, Edward, John. . . . To Joan Hammond my daughter £20. . . . To her 8 children now living, Agnes, Margarett, Thomas, Edward, Robert, Richard, Martha and Sarah, 40s. when married or 21. . . . To 3 daughters of my da. Agnes Thorowgood (Agnes, Mary and Sarah). Jaffrey Thorowgood, husband of Agnes. . . . John Thorowgood, son of my da. Agnes, 53s. when 21" [not 21 in 1601].

FAMILY OF THOMAS MILLER, GENT.—THIRD GENERATION

5. THOMAS[3] MILLER (John[2], John[1]) born in Stortford before 1561; buried in Bishop's Stortford, 23 May 1627. His will is given in Appendix 5. He

* Elizabeth (Meade) Miller's first born son was named Richard, probably in honor of her brother Richard Meade.

matriculated as a pensioner as Thos. Mylner at Trinity College, Cambridge, Michaelmas 1581; received the degree of B.A., 1584/5 and M.A., 1588. He lived in Bishop's Stortford from 1590 to 1627. In the Parish Register he is called "Mr. Thomas Miller," in Hadham Hall Court records "Thomas Miller, Gent.", indicating that he was held in high esteem. He married Agnes (possibly but not necessarily as his 2nd wife), and settled on her by jointure, 7 March 1620, his dwelling in Stortford (Dane O'Coys). She was buried in Stortford, 8 Aug. 1643. As his marriage occurred outside of Stortford and the death of his first wife, if any, is not recorded in Stortford, it is impossible to state which children were by Agnes, excepting Joseph, baptized in 1616, the entry reading as follows: "Joseph Miller sonne of Thomas & Agnes." The practice of registering the names of both parents began in Stortford May, 1615, about a year and a half before Joseph was baptized.

The children of Thomas Miller, M.A., born in Bishop's Stortford were:

i. Elizabeth[4], bp. 3 Mar. 1593 [1593/4?]; d. Roxbury, Mass., 1 Jan. 1664 wid. of "Ruling Elder" Isaac Heath, at the "age about 70."†

ii. Thomas[4], Jr., bp. 18 May 1595; "eldest son"; married 18 May 1626, Hester Cramphorne and had: Mary[5], 25 Apr. 1629 in Sabridgeworth; Anne[5], 9 Oct. 1630, bp. in Bishop's Stortford; Thomas[5], Jr., 28 Apr. 1633, bp. in St. Michael's Church, Bishop's Stortford. Thomas[4] Miller, heir to Dane O'Coys, after death of mother; died in Royden, Essex, bet. 19 May and 1 July 1640. His will is given in Appendix 9. Thomas[5] Miller at the age of 10 years inherited Dane O'Coys after the death of Agnes, widow of Thomas[3] Miller, M.A., in 1643. Hester Miller, widow of Thomas[4], was the executrix of the will of Thomas[4] and probably administratrix. Thomas[5] Miller in 1652, at the age of 19, married Susan Thurgood 1 Oct. at Sabridgeworth. He died before his wife. Susan Miller, widow, died or was buried 1 Nov. 1664, leaving no issue.

iii. Joan[4], bp. 5 Dec. 1596; married (probably Edward) Marshall. She died 1630/31. No male issue.

iv. John[4], bp. 2 May 1598, bur. after 1680; mar. Elizabeth, bur. 17 Sept. 1678. They lived in Sabridgeworth, probably occupying property mentioned in the will of Thomas Miller, M.A., as follows: "All that my messuage & [torn off] . . . my coppyholds and customary lands with the appurtenances situate & being in Sabridgeworth." Their children were: John[5], bp. 13 Nov. 1635, died young; Mary[5], bp. 26 Jan. 1636, mar. Charles Veere.‡ Another John[5] Miller, bp. 10 Jan. 1639; mar. Anne Fowler,ø bp. 1659; she died 11 Feb. 1709. They were married about

† Elizabeth Miller, the first born of Thomas Miller, M.A., was baptized 1593, and married at Ware 14 Jan. 1629, Isaac Heath of Amwell, co. Herts. Isaac Heath was a brother of William Heath who had married, as his 2nd wife, Mary Cramphorne, and had Peleg, Mary, and Hannah—all born in Nazing. These went to Roxbury in 1632. Mary Cramphorne was the sister of Hester, wife of Thomas Miller, Jr., brother of Elizabeth. Isaac Heath, age 50, Elizabeth (Miller) Heath, his wife, age 40 (actually more than 42), and a child of 5 years named Elizabeth, and a "niece" Martha Heath, age 30, sailed on the "Hopewell" Sept. 1635, with Joseph Miller, age "15" (more than 18). (Banks, *The Planters of the Commonwealth*, 175–6.)

The will of Elizabeth Heath (1664), widow of Isaac Heath, "Ruling Elder," mentions Isaac Burnap as follows: "that his mother, my sister," etc. "His mother" was Agnes or Anne (Miller) Burnap of Roxbury and Reading. This will mentions also "my sister Waterman," Margaret (Miller) Waterman. (*Roxbury Lives of Heath, Bowles, Eliot*, by Thornton, 1850.)

‡ (*Feet of Fines*)—Charles Veere & Mary his wife & John Miller, Elizabeth his wife: sell to John Wingfield & Robert Stotesbury 2 houses, gardens & orchards 57 acres of meadow 5 acres of pasture in Sabridgeworth—£100 Sterling. (See Appendix 13.)

ø Anne Fowler may have been a 2nd wife married between the birth of Elizabeth 1683 and Susannah 1690, a gap of seven years.

1679. Their children were: Mary[6], bp. 17 Mar. 1680; Anne[6], 6 Feb. 1682; Elizabeth[6], 22 March 1683, mar. Thomas Eaglesfield and had one son William; Susanna[6], 30 May 1690; Barbara[6], 22 March 1693. All entries in St. Mary's Church, Sabridgeworth employed the prefix "Mr." Thus "Mr. John & Anne." Mr. John[5] Miller, Gent., church warden 1705 to 1709; buried 10 March 1712, leaving no male issue. Both were buried in a floor vault in Great St. Mary's Church. Apparently the vault contained John Miller, Gent., Anne, the wife of John Miller, Gent., and William, "only child of Thomas Eaglesfield, Gent., by Elizabeth his wife, daughter of John Miller, Gent., O.B. 19 Jan. 1726, age 17."

v. Agnes[4], bp. 3 May, 1600; died 27 April 1681 in Reading, Mass.; she married about 1624, Robert Burnap of Stanstead Abbot and later from Amwell, co. Herts. Robert and Agnes (Miller) Burnap followed Isaac and Elizabeth (Miller) Heath to Roxbury in 1638 and after a residence of 8 years moved to Reading, Mass. Robert died 27 Sept. 1689 in Reading. Agnes or Anne§ was not mentioned in the will of her father Thomas, probably as she had already received her marriage portion, but her father bequeathed to her son Thomas Burnap as "my grandson." The will of Robert Burnap of Reading, Mass., dated 15 Nov. 1688, recognized this son Thomas as his "eldest son" as follows: "To my son Thomas, homestead & town privileges with house & land." Their children were:

1. Thomas, b. about 1625. Mentioned in will of Mr. Thomas Miller, M.A., 1627, as "Thomas Burnap my grandchild."
2. Anne, bp. 30 Apr. 1626, da. of Robert Burnappe of Hodsden End and Alice his wife; bur. 20 March 1629.
3. Robert, bp. 28 Nov. 1627, son of Robert Burnappe of Hodsden End and Anne his wife; died 18 Oct. 1695 in Reading.
4. Isaac, bp. 20 Mar. 1629/30, son of Robert Burnappe of Hodsden End and Annis his wife; died 18 Sept. 1667. Isaac was mentioned in the will of his aunt Elizabeth (Miller) Heath, widow of Elder Isaac Heath, 1 Jan. 1664.
5. Anne, bp. 15 Apr. 1632, da. of Robert Burnappe of Hodsden End and Anne his wife; died March 1695. She married (1st) John Wight and had a child || Abigail; mar. (2nd) Isaac Bullard and had 9 children; mar. (3rd) David Jones. (See *Burnap Gen.*) Anne inherited from her aunt Margaret Waterman, widow of Thomas Waterman of Roxbury, the house and lands owned and occupied by Margaret (Miller) Waterman. (Will of Margaret, wife of Thomas Waterman, 1670, by his consent.) This will also bequeathed all "moveables" to "her sister Anne Burnap of Redding, Mass." from his home in Roxbury.
6. A daughter of Robert Burnappe buried before baptism 18 Oct. 1634.
7. Edward, bp. Feb. 12, 1635/6, son of Robert Burnappe of Hodsden End, and Annis his wife.
8. Richard.
9. Infant, d.y.
10. Sarah.

(See *Burnap-Burnett Genealogy* and Reading Vital Records.)

§ Attention is called to the variety of names registered as the wife of Robert Burnap—Anne, Alice, Annis, while she was baptized as Agnes.

|| Abiel (also spelled Abigail) Wight b. Jan. 1st, 1653; m. Samuel Manning of Billerica son of William as his 2d wife b. May 1673 and had nine children. (See Hist. Cambridge.)

vi. Rev. Edward[4], born in Stortford, and bp. 25 Oct. 1601; matriculated as a sizar Queen's College, Cambridge, Easter 1618; B.A. 1621–2; M.A. 1625; ordained deacon in Peterborough, 12 June and as priest 13 June 1625. (*Alumni Cantabrigienses*, V. 3, 189.) Peterborough is a principal city of Northamptonshire; St. Peter's Parish is ancient, the registers beginning in 1578. Rev. Edward[4] Miller married* Ann Hawkshead (widow) (lic. 26 Dec. 1648) and had a son Rev. Edward[5] Miller, Jr., b. 1649 in Cambridge; grad. at St. John's College, Cambridge 1669, B.A. He was awarded an M.A. in 1673. Died 1720. Also a son Rev. Richard[5] Miller, b. 1651; grad. Christ College, Cambridge, B.A. 1669, M.A. 1673. Died 1702 (Peile, ii, 3).

vii. Margaret[4],† bp. 2 Oct. 1603; mar. Thomas Waterman of Roxbury as his 2nd wife. He died 22 Jan. 1675; she died 1682/3. Margaret (Miller) Waterman was mentioned in the will (1664) of her sister Elizabeth (Miller) Heath, widow of Isaac Heath.

viii. William[4], bp. 7 Apr. 1605; mar. Ann Ward 1 May 1635. No issue registered in Bishop's Stortford.

ix. Isaac[4], bp. 8 Jan. 1608/9; alive 1627.

x. Mary[4], bp. 18 Feb. 1609/10; alive 1627. (A Mary Miller was buried 2 June 1670.)

xi. George[4], bp. 10 May 1612; mar. Elizabeth who was bur. 29 Aug.

*** In 1661, Feb. 25, Mary Hawkshead, dau. of Ann Miller (alias Hawkshead), now ux Edward Miller, Gent. (St. Gregory, London) of Cambridge married (lic. Vicar-Genl. of the Arch. Bis. of Camb.) at age 23 Thomas Terry of Barnards Inn, Gent., Bach., about 30. (Parish Register, St. Edwards, Cambridge, England.)**

† Margaret Miller (b. 1603), daughter of Thomas Miller Gent. of Bishop's Stortford, and sister of Joseph Miller of Newton, Mass., married John Stonard March 12, 1631, in the Parish of St. Dunstans-in-the-West, London, England (Par. Reg.).

The parents of John Stonard have not been found at this date, May 1941. Several Stonards (all spelled S-T-O-N-A-R-D) lived in Essex Co., England in the region of Loughton, Stapleford-Abbott and Harlow. (See Harl. Soc. Visitations of Essex 1635.)

John and Margaret (Miller) Stonard remained in England ten years after their marriage before removing to Roxbury, N. E. Thus there was time enough for them to have had several children born in England. However, the Parish Register of St. Dunstans-in-the-West contains no baptisms nor burials of their children. Two children, probably of John and Margaret (Alice and Joseph), about eight to ten years old are supposed to have arrived in Roxbury.

The Stonards arrived in Roxbury 1642/3; they purchased from Richard Pepper a house and eight acres of land paying £50. (See Stonard Inv. Aug. 20, 1649.) He mortgaged the house and land to Governor, the Hon. Thomas Dudley in 1645, which mortgage was discharged Jan. 1646. (Suff. Co. Lib. 1, fol. 62.)

They may have had younger children for the Inventory contains this item: "1 trundle bedd." None are mentioned in Roxbury Vital Records. John Stonard died Aug. 13, 1649, "midle aged or litle more" indicating his birth about 1600, three years before Margaret. (Roxbury Church Records.)

About a year later Margaret, at the age of 47/8, and the widow of John Stonard, married Thomas Waterman of Roxbury as his second wife. The latter is thought to be from Bishop's Hatfield, Co. Essex, a few miles east of Bishop's Stortford. Waterman died 1675 leaving the bulk of his estate to his wife. She died 1682, aged 79, at Dedham, probably in the home of her niece and principal heir, Ann Bullard nee Burnap. (See Donald Jacobus's Genealogy of the Waterman Family.)

Joseph Stannard (Stonard) of Hartford, Haddam and Saybrook, Conn., presumed to be a son of John and Margaret Stonard, was probably named after Margaret's brother Joseph Miller. Alice Stonard, daughter of John Stonard, was probably named after Alice the sister of Margaret (also called Agnes, Anise, and Ann). She married Anthony Shaw in April 1653 by Increase Nowell and had Ruth m. John Cook, Grace m. Joseph Church, William, Elizabeth, Mary and Israel. (Boston Document 130.) ("Certain Comeovers," H. H. Crapo, V. 1, p. 293) (Austin Gen'l Dict. of R. I.)

Joseph Stannard married Elizabeth Spencer in Haddam, Conn. about 1667. (14 years after his sister Alice was married.) They had Joseph (1668), Samuel (1669), John (1671), William (1674) and Elizabeth (1677).

Joseph Stannard (died 1688) of Saybrook, Conn., New London Probate District No. 5033. Inventory Aug. 20, 1688.

1665. Parish Register reads: "wife of George Miller of London." In 1667 George Miller paid £60 to John Rogers and Thomas Hastler for a house, barn, and garden in Bishop's Stortford. (*Feet of Fines*, co. Herts., 1667.) In 1642 George Miller was living in Windhall, Bishop's Stortford. The Register contains the following children of George Miller:

1. John[5], bp. 22 Mar. 1639; died 27 Mar. 1640.
2. John[5], bp. 8 Aug. 1641.
3. Anne[5], bp. 25 Aug. 1644.

xii. Daniel[4], bp. 25 Mar. 1614; alive 17 May 1627.

xiii. Joseph[4], bp. 30 Dec. 1616, who came to Roxbury, Mass., 1635 (age 18), in company with his eldest sister Elizabeth (age 42), wife of Isaac Heath.

FACTS ABOUT JOSEPH MILLER OF BISHOP'S STORTFORD

During the boyhood of Joseph Miller—1616 to 1635—King James I ruled England until 1625, and was succeeded by King Charles I. Both kings sought religious conformity by compulsion; they expelled or hung Catholic priests, persecuted Puritans and demanded regular church attendance. Archbishop Laud required strict adherence to the ritual of the Church of England. In 1633 Laud was promoted by King Charles I from Bishop of London to Archbishop of Canterbury. The effects of his persecution of Puritans are well known. However, the great exodus of 1635, to New England so far as Bishop's Stortford was concerned, was chiefly prompted by economic reasons.

1631 Exodus

The exodus of emigrants to New England from Bishop's Stortford in 1631 was undoubtedly led by Rev. John Eliot of Nazing and Rev. John Norton of Stortford. The followers of Eliot settled in Roxbury, Mass., and the followers of Norton in Ipswich.

Thomas Miller, eldest brother of Joseph, and heir to Dane O'Coys, lived in Royden, co. Essex, a hamlet adjoining Nazing, in which John Eliot was the undoubted leader.

Joseph's sister, Elizabeth (Miller) Heath, wife of Isaac Heath, lived in Amwell, and his sister Agnes (Miller) Burnap of Stanstead Abbott lived later (1634) in Amwell, all within a radius of two miles including Nazing and Royden. Thus Joseph Miller and his brothers and sisters were in close touch with the emigration plans of residents of both Bishop's Stortford and Nazing.

William Denison of Stortford with wife Margaret (Chandler) and sons Daniel, age 19, Edward, 15, and George, 11, migrated to Roxbury in 1631, in company with John Eliot.

Rev. John Norton, a native of Stortford (bp. 1602), was assistant in Stortford Grammar School after graduating from "Peterhouse," Cambridge, 1627, and curate to Rev. Mr. Bendish, St. Michael's Church, until 1632.

1632 Exodus

In 1632 William Heath of Nazing, co. Essex, brother-in-law of Elizabeth (Miller) Heath, with Mary (Cramphorne) his wife and their children, Peleg, bp. 30 Jan. 1624/5, Mary, bp. 2 Sept. 1627 and Hannah, bp. 5 Nov. 1629 (all baptized in Nazing), also followed John Eliot to Roxbury. Mary Heath, the wife of William, had a sister Hester Cramphorne, who had married Thomas Miller and lived in Royden adjoining Nazing.

Such an exodus of eleven persons, all related by marriage to Joseph Miller and his sisters of Bishop's Stortford, must have made a profound impression on all his family, including his mother.

It seems certain that Joseph Miller's eldest sister, Elizabeth, the wife of

Isaac Heath of Amwell, was the leader in the family of Thomas Miller, M.A. (deceased), in all plans for joining the exodus to New England.

RELATIONSHIP OF JOSEPH MILLER OF STORTFORD TO ISAAC AND WILLIAM HEATH OF ROXBURY, MASS.

On the passenger list of the ship "Hopewell" for Sept. 1635 (Banks), we find the name of Joseph Miller, age 15 (understated), and Isaac Heath, age 50, Elizabeth Heath, age 40, and Martha Heath (possibly a niece), age 30, and a child Elizabeth, age 5, on their way to join the brother William Heath, a most useful citizen of Roxbury, New England, since 1632, ancestor of the famous Major General William Heath of Revolutionary days (born in Roxbury 7 Mar. 1737; died 24 Jan. 1814).

The *History of Roxbury* frequently refers to Isaac Heath as "Elder" Heath. The will of William Heath, dated May 24, 1652, mentions "My dear brother Elder Heath."

The will of Mary (Lyndesell) Cramphorne,* widow of Thomas Cramphorne of Sabridgeworth, co. Herts, dated 6 April 1630, mentions "Hester my dau. the wife of Thomas Miller" and "William Heath my son-in-law." Thus by marriage, Joseph Miller and his sisters Agnes Burnap and Elizabeth were related to the Heaths.

---

* Will of Mary [Lyndesell] Cramphorne, 6 Apr. 1630, widow of Thomas Cramphorne:
I Mary Cramphorne of Sabridgeworth in the county of Hertford widowe

To Ester [Hester] my daughter the wife of Thomas Miller a parte of my lynine as I have laid it aside for her.

To John Perry my sonne-in-lawe Is.

To William Heath my sonne-in-law Is.

To John Cramphorne my soone I joyned bedsted also to Mary his wife my best gown.

To Thomas Cramphorne the sonne of Daniel Cramphorne my sonne IIs. to bye him bookes.

Residue to my exors: to discharge my debts and legacies and burye me decentlye.

I make Daniel Cramphorne of Stortford and John Cramphorne of Sabridgeworth, my sonnes, exors; and Thomas Miller of Stortford my sonne-in-law my overseer.

Mary X Cramphorne
Jane X Bickner witnesse

Proved at Stortford Feb. 28, 1631 by Daniel Cramphorne power reserved to John Cramphorne.—Commissary of London (Essex & Herts).

"Wm. Heath, son-in-law."

Mary Cramphorne married William Heath of Nazing: they had Peleg, bp. 30 Jan. 1624/5; Mary, bp. 2 Sep. 1627; Hannah, bp. 5 Nov. 1629; and sailed to Roxbury, Mass. in 1632.

"John Perry, son-in-law."

John Perry married Phoebe Cramphorne Nov. 1614 in Sabridgeworth; probably Phoebe died soon and John Perry married Ann Newman 9 July 1628 in Sabridgeworth. The will of Mary Cramphorne does not mention Phoebe. John Perry and wife Ann appear in Roxbury, Mass., and in his will, 1642, he refers to William Heath and Phillip Elliott as beloved brethren.

Transcripts from Parish Registers Sabridgeworth and Bishop's Stortford:
Thomas Cramphorne, son of William, bp. 31 July 1561.
Mary Lyndesell and Thomas Cramphorne mar. 27 Sept. 1580.
Daniel, son of Thomas and Mary Cramphorne, bp. 24 Apr. 1585.
George, son of Thomas and Mary Cramphorne, bp. 16 Nov. 1589.
Mary, dau. of Thomas and Mary Cramphorne, bp. 16 Jan. 1592.
John, son of Thomas and Mary Cramphorne, bp. 25 Mar. 1594.
Hester, dau. of Thomas and Mary Cramphorne, bp. 30 Jan. 1597.

Daniel Cramphorne mar. 14 Sept. 1610 Mary Burnap, sister of Robert Burnap, who married Ann or Agnes Miller. They had: James, bp. 21 Jan. 1618 in Bishop's Stortford; Anna, 25 Oct. 1620 in Bishop's Stortford; Joseph, 1 May 1623 in Bishop's Stortford; Sarah, 1 May 1625 in Bishop's Stortford.

Daniel Cramphorne buried 21 July 1659 in Sabridgeworth.

Mary (Burnap) Cramphorne, widow of Daniel, died in Stortford, bur. in Sabridgeworth 2 Dec. 1675.

Hester Cramphorne mar. Thomas Miller, Jr. of Stortford 8 May 1626. Thomas Miller was the heir to Dane O'Coys, the estate of his father "Mr." Thomas Miller, M.A., Bishop's Stortford, after the death of Agnes Miller, widow. He died 1640 in Roydon, co. Essex. Agnes Miller died 1643 and Dane O'Coys then was the property of Thomas Miller III, age 10. His mother Hester Miller was extx. of the estate.

CRAMPHORNE FAMILY OF SABRIDGEWORTH

Thomas Cramphorne, son of William, bp. 1551, married 27 Sept. 1580 Mary Lyndesell of Sabridgeworth and had:

i. Daniel Cramphorne, bp. 1585, who mar. 1610 Mary Burnap, a sister of Robert Burnap of Stansted Abbots. Robert was born about 1595, died 27 Sept. 1689 in Reading, Mass. He mar'd about 1625, Agnes or Anne Miller, da. of Thomas Miller, M.A., deceased, bp. 4 May 1600, sister of Thomas Miller (who mar'd Hester Cramphorne) and sister of Joseph Miller of Bishop's Stortford. Their son Thomas is mentioned in a codicil of Thomas Miller, M.A. 1627. (See *Burnap-Burnett Genealogy*, in error, respecting the birth of son Thomas Burnap and surname of Ann, his mother.) Robert Burnap, wife Anne (Miller), and several children arrived in Roxbury in 1638, where he was a proprietor in 1640; removed to Reading about 1646. Ann (Miller) Burnap died 27 Apr. 1681, at Reading. Robert Burnap's will, proved 1689, provides: "To son Thomas homestead and town privileges with house & land."

ii. Hester Cramphorne, bp. 30 Jan. 1597, mar'd 1626 Thomas Miller, Jr., son of Thomas Miller, M.A., deceased, and brother of Agnes Miller, Joseph Miller and Elizabeth Miller, wife of Isaac Heath.

iii. Mary Cramphorne, bp. 16 Jan. 1592, who mar'd abt. 1622 William Heath of Nazing as his 2nd wife, and had Peleg 1624, Mary 1627, Hannah 1629. (Parish Regs., Sabridgeworth and Nazing.)

Roxbury church records report arrival in 1632 of William and Mary Heath with children Isaac and Peleg, Mary and Hannah, children by Mary (Cramphorne), bp. in Nazing. Martha Heath, perhaps da. of William Heath by his 1st wife, followed in 1635 (age 30) with Isaac Heath.

ST. MICHAEL'S CHURCH—A FOCAL CENTER

St. Michael's was the only church in Bishop's Stortford up to 1662, and it was compulsory for adults to attend church services. Boys and girls were compelled to attend classes to study the catechism, the Bible and Prayer Book. These classes contained children of approximately the same age. Hence Joseph Miller must have had intimate acquaintance with children nearly his own age and his brothers and sisters attended classes of approximately their ages. However, all these church classes were taught and influenced by the Rev. Thomas Bendish, M.A., Vicar, a Protestant until his death in 1632, and his curate, the Rev. John Norton, who became the famous Puritan preacher of Ipswich and Boston, New England. This leadership indicates that the Rev. Mr. Bendish, vicar, was not strongly anti-Puritan. The Rev. Mr. Norton must have been the teacher of Joseph Miller and of some of his older brothers and sisters. Norton resigned before 1632 and went to New England in 1635.

It is highly significant that Elizabeth (Miller) Heath, the wife of Ruling Elder Heath of Roxbury, did not join the Congregational church in Roxbury. Nor did her sister Anne (or Agnes) Burnap; nor another sister, Margaret, wife of Thomas Waterman. The same thing can be said of Joseph Miller.

The attitude of certain church wardens toward the edicts of Archbishop Laud is indicated when the Archbishop sent his chancellor to Bishop's Stortford Sept. 9, 1634. The church warden paid the bell ringers 5 shillings "*for not ringing* the 9 of September when the chancellor came." And 2 shillings and 2 pence "*for ringing* on the morrow at his going away" (Glasscock's *Church Records.*) Ringing church bells was the accepted manner of honoring distinguished guests visiting Bishop's Stortford. In this case it was the reverse. When, however, King Charles I came to Stortford in 1629, he was so honored.

The Church Warden's accounts in that year contained this item: "Paid for ringing the daye that the King dyned at the George"—an ancient Inn still standing close to the church and then managed by George Hawkin, a son of Mary (Miller) Hawkin, an own cousin of Joseph Miller and his sisters Elizabeth, Agnes and Margaret.

After Vicar Bendish died and Curate John Norton resigned, new teachers were appointed. Rev. Richard Butler, M.A., became rector in 1632, and Mr. Thomas Leigh, the renowned head master of the Free Grammar School began his duties in 1631 as head. This school, famed for its distinguished graduates, was situated adjacent to St. Michael's churchyard where, at a later date, Mr. Leigh, S.T.B., became vicar. This school then and St. Michael's church must have brought together many boys of the age of Joseph Miller and his brothers.

Because of depleted finances in the Miller family after the death of Joseph's father, Mr. Thomas Miller, M.A., Joseph Miller was probably educated in this school up to 1635. His family could not afford to send him to college and his sister Elizabeth, age 42 in 1635, wife of Isaac Heath of Amwell, probably was responsible for taking him to Roxbury, New England, in 1635.

SCHOOLMATES OR CHURCHMATES OF JOSEPH MILLER, BAPTIZED 1616

1. John Chandler, baptized 1616, and Robert Chandler, bp. 1619, sons of Jane (Miller) Chandler, own cousin of Joseph Miller. William Chandler, who settled in Roxbury, Mass., was nine years older than Joseph. William was the brother of Margaret Chandler, who married William Denison and removed to Roxbury 1631.
2. John Dane, bp. 1612, was four years older than Joseph Miller. He was the first of the Danes to go to New England. His second wife was Agnes (Bayford) Chandler, widow of William Chandler of Roxbury. Francis Dane, bp. 1615, was a year older than Joseph and was the son of John Dane and Frances Bowyer and emigrated to New England.
3. The sons of William Denison and Margaret Chandler were nearly the age of Joseph Miller. George Denison, bp. 1609; Daniel bp. 1612; Edward bp. 1616, the same year that Joseph was born. All went to Roxbury.
4. George Abbott, son of George and Elizabeth, was bp. 1617, a year younger than Joseph, and was the emigrant ancestor of the Abbotts who settled in Andover. However as a lad he went to Roxbury where he married Hannah Chandler, da. of William and Agnes Chandler.
5. Ralph Earle, bp. 1606, arrived in Boston 1634. He was ten years older than Joseph.
6. William Savell, bp. 1607, was nine years older than Joseph. His emigration to New England has not been ascertained.
7. Ralph Emerson was bp. 1615, a year before Joseph Miller. He was the son of Thomas and Elizabeth Emerson and was killed by falling from a tree, 8 June 1626. Thomas Emerson and Elizabeth Breuster of Bishop's Stortford emigrated to New England and settled in Ipswich with sons about Joseph's age, viz. Benjamin Emerson, bp. 1614 and James Emerson bp. 1617.
8. John Burnap, son of Thomas and Mary (Eliot), was bp. 1618. He was a cousin of Joseph Miller.

THE MILLER FAMILY IN 1635 AT DANE O'COYS, BISHOP'S STORTFORD

From the parish register of St. Michael's church it is known that in 1635 the following brothers and sisters of Joseph Miller of Stortford were alive. John Miller age 37 was living in Sabridgeworth, 4 miles distant; Thomas Miller,

eldest son, age 40, in Roydon, co. Essex, adjoining Nazing, awaiting his inheritance of Dane O'Coys; sister Elizabeth, age 44, the wife of Isaac Heath, was living in Amwell, about two miles distant; sister Agnes, age 35, wife of Robert Burnap, was also living in Amwell adjoining Roydon; sister Margaret, age 32, m. John Stonard 1631 in London.

Brother Rev. Edward Miller, M.A. (Camb. 1625) age 34, was probably living in Peterborough, Northhamptonshire, unmarried at that time.

Brother William, age 30, had married Anne Ward and was living nearby.

Of brothers Isaac, age 27 and Daniel, age 21, we simply know that both were alive. Brother George, age 23, was living in Stortford, probably unmarried.

These ten children with his own mother Agnes had the welfare of their youngest brother, Joseph Miller, at heart in troublesome days when the exodus from England to New England was at its peak.

The Rev. John Eliot of Nazing, born in Widford only 7 miles distant, said to have been the tutor of the children of William Denison, had already lived in Roxbury, N. E., for four years.

William Denison and family accompanied John Eliot to Roxbury in the ship *Lion*, 1631. William Denison's wife was Margaret Chandler, sister of John Chandler of Stortford, who had married Jane Miller, da. of John Miller, the Elder, and own cousin of Joseph Miller and, of course, his sisters, Elizabeth, Agnes and Margaret.

John and Jane (Miller) Chandler remained in Bishop's Stortford. Letters from Margaret (Chandler) Denison to her brother John logically would find their way to the Miller family.

William Heath of Nazing, brother of Isaac Heath of Amwell, co. Herts, followed the Denisons in 1632. Hence they had lived three years in Roxbury, New England. William Heath's second wife was Mary Cramphorne, own sister of Hester (Cramphorne) Miller, wife of Thomas Miller, Jr., eldest brother of Elizabeth, Agnes, Margaret and Joseph, and living quite near both sisters Elizabeth and Agnes in Amwell.

Thus we have a double contact between the Heaths and the Millers. Is it therefore any surprise that when the ship *Hopewell* sailed in Sept. 1635, bearing Isaac Heath, 50, Elizabeth Heath, 40, child Elizabeth 5, that their fellow-passenger Joseph Miller, "age 15," was none other than Joseph Miller of Bishop's Stortford?

Letters from Mary Heath in Roxbury must have been optimistic and encouraging to her sister Hester Miller and of vast importance to the brothers, sisters and mother of Joseph Miller. Such letters would naturally praise New England because land grants were freely given to new settlers, and people of wealth and high social position were emigrating from England and settling in Roxbury, New England. There were Thomas Dudley, the governor, related to the Earl of Dudley, Sir Isaac Johnson and Lady Arabella, the Pynchon and Weld families—all living in Roxbury.

The exodus from England increased each year after 1631 and reached its peak in 1635. It is common knowledge that in England in 1635 "times were hard" and taxes exorbitant which promoted migration from Bishop's Stortford and elsewhere. There was also remorseless pressure exercised by Laud, the Archbishop of Canterbury, upon Puritanism. "It was plain that the purpose of Laud aimed at nothing short of the utter suppression of Puritanism. Thousands of the best scholars, merchants, lawyers, farmers were flying over the Atlantic to seek freedom and purity of religion in the wilderness," wrote John Richard Green in his *History of the English People.*

In such a turbulent period Joseph Miller, and his sister Elizabeth (Miller) Heath, son and daughter of Thomas Miller, M.A., left England with others from Bishop's Stortford for the new world. The fortunes of Joseph Miller's

relatives were being depleted. Though the son of a gentleman, Joseph Miller was without funds when he sailed at the age of 18 with his sister Elizabeth on the *Hopewell* in 1635.

Incidentally Joseph, the youngest child, could not receive his inheritance until the death of his mother, and his sister Elizabeth, the oldest daughter, received more money and more property than any of her sisters.

It is significant that we find that because of utter lack of capital Thomas Miller, heir of Dane O'Coys, Hester his wife, Agnes Miller, widow, his mother, and Daniel Cramphorne, trustee, sold 34 acres of land to Arthur Capell for the sum of £41 sterling before the sailing of the *Hopewell.* This could not have been for Elizabeth, for she had at least £100 from her father's estate. Joseph had nothing.

When the news came to the Miller family in Dane O'Coys, Stortford, that Isaac Heath with his wife Elizabeth (Miller) Heath with one child were to sail in September on the *Hopewell* to join their brother, William Heath in Roxbury, the last doubt respecting the wisdom of Joseph Miller's emigration to Roxbury must have vanished.

Early in 1636, one year after Joseph's sailing, a grant dated March 15 was made of a field called "Silverlays," which was a large part of Dane O'Coys, Bishop's Stortford, as "in occupation of John[4] Miller" (an own cousin of Joseph Miller) who also had land north of this described as "Late of Thomas Miller." This John[4] Miller was the son of John[3] Miller "the elder," a man of wealth and a father of eleven children, and who died in 1612. John[4] Miller married Martha and died in 1640, aged 57 years. His son John[5] Miller married Mary Ashby, and he died in 1645, leaving a son John[6] Miller who was born in 1644 and died in 1646, and a daughter Sarah. *Thus ended the John Miller line.* The property passed to Mary (Ashby) Miller, widow, and Sarah[6], her daughter. Sarah later married a Mr. Eve. All this on or before 1645.

Sir Walter Gilby of London purchased several parcels of land including the farmhouses, stables, etc., that belonged to Dane O'Coys. Numerous owners of Dane O'Coys are named in a deed of Robert Hanbury, Esq., to W. R. Hawks, Esq., dated December 29, 1879. The deed mentions "Dane O'Coyes," "Little Silverlyes," and so forth; formerly held by John Kipler; afterwards by Nathaniel Carter; formerly the estate of William Tyson and Anne his wife, and were granted to Thomas Aderley 1673, "formerly owned by Thomas Miller."

JOSEPH MILLER EMIGRANT

It was the decision on the part of Charles, then King of England, to put a strong fleet upon the Channel to challenge the rising sea power of the Dutch and French people, which promoted emigration. Money had to be raised at home. Parliament had not met and the levy for ship money was accordingly converted into a general tax and imposed by the royal will. Added to the mounting debt this new levy became at once a great economic burden as well as a new danger to freedom in England. For already property owners had experienced and were experiencing fines and levies to meet the needs of the Crown. Possessors of property found themselves liable for economic burdens they were quite unable to bear, and many turned toward the New World to escape the confiscatory taxes of the King.

In such a period Joseph Miller, son of Thomas Miller, M.A., with his sister Elizabeth (Miller) Heath, left with others from Nazing, Amwell and Bishop's Stortford for the New World in 1635. Their sister Agnes (Miller) Burnap from Amwell followed and also settled in Roxbury in 1638. Possibly to pay his passage it seemed necessary for his mother and oldest brother Thomas to sell a portion of Dane O'Coys. Eight years before "Maister" Thomas Miller, M.A., had died and the properties had been divided among his thirteen children. Under the will, however, the oldest son, Thomas Miller,

Jr., became the sole heir of Dane O'Coys with its 71 acres, but only after the death of his mother. The property belonged to Agnes Miller, the widow, so long as she lived. The Thomas Miller family in Bishop's Stortford reached its zenith of prosperity in 1627. This is partly proved by comparing Lay Subsidies as follows:

1626—Mr. Thomas Miller, M.A., paid a tax of five pounds twelve shillings.
1627—Mr. Thomas Miller, M.A., died.
1628—Agnes, widow of above, paid only twenty shillings (one pound).

Thomas[4] Miller, Jr. died in 1640. His mother, Agnes, died in 1643; therefore, Thomas Miller, Jr. never had possession of Dane O'Coys.

When Agnes Miller, the widow, died, Thomas[5] Miller, a son of Thomas[4], Jr., a boy of ten years, possessed Dane O'Coys. This boy in 1652 married Susan Thurgood, and in 1656, Thomas[5] Miller and his wife Susan sold to John Coller one house, one curtilage, one malting house, three barns, one stable, three yards, two gardens, twenty-seven acres of land, for sixty pounds sterling. (See Appendix 13.) In fact, Thomas[5] died without issue and ended the line; and *Dane O'Coys passed out of the Miller family.* Susan, the widow, died in 1664.

JOSEPH MILLER'S INHERITANCE

Joseph Miller, the thirteenth child, was remembered in the will of his father, Thomas[3] Miller, M.A., in 1627, in the following manner: George, aged 15, Daniel, 13, and Joseph, 11, jointly inherited seven parcels of vacant land, totalling seventeen acres, but *only* after the *death* of his *mother.* She died in 1643; at that time George, Daniel and Joseph jointly were to pay twenty pounds to Isaac before 1645, and the same to William before 1646. Failing to pay, this property was to become Isaac's and William's. Therefore, in 1635, Joseph Miller was without capital. Nothing had come to him from his father's estate.

Because of this utter lack of capital, we must conclude that the sale of 34 acres to Arthur Capell, Esq. (beheaded March 1649), by Joseph's oldest brother, Thomas Miller, and Hester, his wife, Agnes Miller, widow, his mother, and Daniel Cramphorne, trustee, for the sum of (41) forty-one pounds sterling, two months before the sailing of the *Hopewell* was, in the main, for the purpose of financing Joseph's trip to New England. It also indicates the lack of cash capital on the part of the mother and her son, Thomas. A recent reading of the will of "Mr." Thomas Miller, M.A., reveals that he left no money directly to any of his children. The daughters, however, were to receive in pounds sterling from his sons to whom he left real estate in various forms, with a proviso that if any son failed to pay by the dates named, the daughters were to become heirs of the property named.

THE IDENTITY OF JOSPEH MILLER AND HIS SISTERS ELIZABETH, ANNE AND MARGARET MILLER

This is the story of three wills. It is the record of bequests in the will of Thomas Miller, M.A., the father, probated in Bishop's Stortford in 1627, and the wills of Elizabeth Heath and Margaret Waterman, two of the daughters, probated near Roxbury in 1664 and 1670 respectively. These wills supplement each other and provide important links in the chain of evidence in the record of the migration of Joseph Miller and three of his sisters, all of Bishop's Stortford, to Roxbury.

Mr. Thomas Miller, M.A., in his will, dated 17 May 1627 (Appendix 5), provided for his thirteen children all of whom are recorded in the parish register of Stortford. His daughter Agnes or Anne was not named in the will, but in a codicil her child Thomas Burnap was given ten shillings. It is presumed that Agnes had received her marriage dowry when she married. The *Burnap-Burnett Genealogy* sets forth that Ann married Robert Burnap about 1624–5.

Her surname was unknown. The following is quoted from the codicil of Thomas Miller:

"Item—I give to Thomas Burnope, my grand child the sum of Tenn shillings."

Clearly, this child, Thomas Burnap, probably the first born son, was born "before 1627."

The will of Robert Burnap of Reading, Massachusetts, 1688, recognized Thomas as his eldest son as follows. "To my son Thomas, homestead and town privileges with house and land."

The first of the two Roxbury wills, namely that of Elizabeth Heath, widow of Isaac Heath, Ruling Elder of Roxbury, is dated 1664, and confirms the marriage of Anne Miller to Robert Burnap. In this will Elizabeth mentions Isaac (Burnett) and added "his mother my sister." The Burnap genealogy records the birth of Isaac Burnap as follows: "The sonne of Robert Burnap of Hodston and Annis (Anne), his wife bap. 20 Mar. 1629–30." Isaac died 18 September 1667 at Reading. The conclusion is obvious, Elizabeth Heath was the former Elizabeth Miller of Bishop's Stortford born 1594, died 1664, age 70, and likewise the eldest sister of Joseph Miller. She was the sister of Anne Burnap who in turn was the mother of Isaac Burnap.

This relationship which has now been established between Elizabeth (Miller) Heath and Joseph Miller explains the presence of Joseph, "age 15," on the ship *Hopewell* September 1635 in company with Isaac Heath, age 50, Elizabeth (Miller) Heath, age 40, and child Elizabeth, age 5. Joseph and Elizabeth were brother and sister. According to the parish register Elizabeth was actually 42 and Joseph who was recorded as 15 was actually 19. It is evident, however, that Elizabeth Heath was the guardian of Joseph Miller. Elizabeth (Miller) Heath had only one child of her own, five years old, in 1635, and the addition of Joseph to the family would not be likely to overcrowd the home. This child Elizabeth when she grew to womanhood, married another Ruling Elder of Roxbury namely, John Bowles, on April 2, 1650.

Three years after the arrival of Isaac and Elizabeth (Miller) Heath and Joseph Miller in Roxbury, Agnes (Miller) Burnap, a sister of Joseph and Elizabeth (Miller) Heath, who had married Robert Burnap of Amwell, co. Herts, came to Roxbury (1638) with their sons Thomas, Robert, Isaac, Edward, and their daughter Ann. They lived in Roxbury for eight years and then moved to Reading, Mass. In that same year (1646) Joseph Miller moved to Cambridge.

As a further confirmation of the identity of Joseph Miller and his two sisters Elizabeth and Agnes, a third sister Margaret Miller arrived in Roxbury probably after 1640 and after the untimely death in England of Thomas Miller, Jr., heir to Dane O'Coys in Bishop's Stortford. Margaret Miller married Thomas Waterman as his second wife after 1649.

Twenty-eight years later, namely 1670, Margaret Waterman with the consent of her husband Thomas made her will. Her sister Elizabeth (Miller) Heath had been dead six years and twenty-four years had elapsed since sister Anne Burnap had moved with her family to Reading, Mass. In her will Margaret mentions "my sister Anne Burnap of Redding," to whom she gives all her moveables. Thus, Margaret Waterman reveals her identity as the former Margaret Miller of Bishop's Stortford born in 1603, and at that period

---

The Ware (Co. Herts., Eng.) parish register contains the following:

Married 14 Jan. 1629 Isaack Heath and Elizabeth Miller; also St. Dunstan's-in-the-West in the City of London contains this: Married 12 May 1631 John Stonard and Marg^{t}. Miller by license from the Faculty Office.

"Margaret (Miller) Waterman of Roxbury was the widow of John Stonard. He died in Roxbury 1649." Roxbury Land Records listing the lands of Isaac Johnson included "eleven acres bought of Thomas Waterman and Margaret his wife lately the land of John Stonard."

67 years old, Margaret was the third sister of Joseph Miller (of Bishop's Stortford) to settle in Roxbury. Margaret (Miller) Waterman gave her house and land to Ann Bullard, daughter of Anne and Robert Burnap, whose second husband was Isaac Bullard (Vol. 6, part 2, Suffolk co. Court).

Margaret (Miller) Waterman died in 1682/3 at the age of 80. Her sister Anne (Miller) Burnap had died a year earlier, namely in 1681 at the age of 81 years. Joseph Miller survived his two sisters and died in 1697 at the age of 81 years. Elizabeth who had died in 1664 lived to the age of 70.

Thus the identity of Joseph Miller of Bishop's Stortford and his three sisters are fully revealed in the documentary evidence of the three wills and the supporting evidence of the Burnap will.

THE WILL OF ELIZABETH (MILLER) HEATH

The following is quoted from a book entitled *Roxbury, Lives of Heath, Bowles and Eliot*, by J. W. Thornton, 1850.

Mrs. Elizabeth Miller Heath, Widow of Ruling Elder Isaac Heath.

Mrs. Heath survived her husband but four years, and died when about seventy years of age;* her Christian faith and character, her generous care for all about her, her amiable temper and benevolent recognition of all with whom she was connected, beautifully appears in this last solemn act of her life.

Her will mentions her relationship or connection with so many of the Roxbury families, as Burnet, Gary, Johnson, Waterman, Brand, Morris, etc., that it furnishes a strong reason for believing they were from one locality or neighborhood in England. Studied ingenuity could hardly have named so many relationships, without indicating the family name of the testatrix. Patient inquiry in regard to the several surnames mentioned in the will, might possibly lead to the discovery of her maiden name.

January 1, 1664.

In the name God Amen. I Elizabeth Heath of Roxbury, widow, being by the mercy of God, perfect in minde and will, though very weak in Body, Doe hereby make ordaine and publishe this to be my Last will and Testament, hereby Revoking all my former wills if any.

ffirst. I give and resighne up my soul into the armes of my Dear Lord and Savior Jesus Christ my redeener, hoping and beleuing at my resurrection by his meritts to partake of his Glory. And for my Body I Commit to ye earth to be Decently Interred by my executr: And for the portion of goods and estate the Lord hath lent me I give Bequeath and Dispose of al ffolloweth.

Impr. I give unto my sister (Anne) Burnet, and Martha Brand my two Cowes heer at home after my Death, my sister to take her Choice, and my will is they Bee kept this winter of my Hay, without any charge to them.

It. I give to Isaack Burnet Lately gone to sea my young sow, if he either Come Back or send before ye next summer, else my will is that his mother my sister shall have her and that she [be] kept at my charge until then.

It. I give unto Jacob Newell's wife twenty shillings to be pd. her within one moneth after my Death halfe in money the rest in Corne.

It. I give unto Isaack Jones his daughter, that he had by Hannah Heath fifteen shillings, five in money the rest in corne, paid her within a month after my Death.

It. I give to Mary Heath 20s and to Nicholas Williams as much to be paid to either of ym within the moneth after my Death.

It. I give to Thomas Morey ten shillings to bee paid him a little before his time of service [illegible] and as much to his mother that now is to be paid her within a moneth after my Decease.

It. I give to my cousin Garry the Old man, twenty shillings and to Goodman Fruysell married Goodman Busketh Daughter as much to be pd each of them within one month after my death.

---

* "1664, month, day, 14, Elizabeth Heath, widow of Elder Heath, buryed." Eliot's Ch. Rec. fol. 478.

It. I will and appoint that my Cousinne Capt. Johnson shall have the ffirst yeare's increase of my two Cowes at Isaack Williams.

It. I give to my Grandchildren [prob. Bowles] my three Cowes two Being at Isaack Williams and that I left to Goodman Bush.

Item, my Minde and Will is that my sister Waterman shall have the use of my Mare during her Life and I give her unto John Bowles my grandchild, and my wearing apparrell I give Between my sister Burnett and Waterman.

And I make, Ordaine and appoint my sonne in Law Bowles Executor of this my will.

At a Meeting of the Magistrates and Recorder 19th Jan. 1664 Power of Administration to the estate of Elizabeth Heath Widow is Granted to John Bowles to performe the Imperfect will above written as near as may bee, Bringing in an Inventory of the Estate to the next Court.

Present. Edw. Rawson, Recorder.
P. Bellingham, Depty. Goverr.
Capt. Gookin
and Recorder.

Suffolk Probate Records, Wills, Vol. 1:442.

Jan. 31, 1664. William Parke and Thomas Welld, appraised the estate—Mr. William Crowne, John Palmeter, Robert Pepper, Jonathan Peake, Hugh Thomas, Arthur Gerye, Mrs. Meades, Jno. Polly and Joseph Wise owed the estate,—which is Dr to Legacies bequeathed. To George Branne, and to her sister Burnup, to her sister Waterman—, to Capt. Johnson the use of 2 Cowes 1 year, and after given unto John Bowles children, to James ffrissell, Edward Morris, and Isaack Burnop—to Coffinne and Rayles, wine at her Burial, to Maids wages, to the church, to Edward Morrisse, to Thomas Hawley, to Joshua Lambe, Goodman Griffinne—Goodwife Tillar. &c.&c.

ffeb. 8. 1664. Jno. Bowles deposed in Court that this paper Contains a true Inventory of the Estate of Widow Heath his Late Mother in Lawe, to his Best Knowledge and when he Knowes more he will discover it. Edward Rawson, Recorder.

Suffolk Probate Records, Inventories, Vol. 4: fol. 217, 218.

THE WILL OF MARGARET (MILLER) WATERMAN

Will of Margaret (Miller) Waterman (Vol. 6, part 2, Suffolk Co. Court Probates), dated 19 May, 1670, wife of Thomas, "who gave his consent to this will." (Thomas Waterman died 22 Jan., 1675, Roxbury Vital Records.)

Item. My son Thomas Waterman, Jr. £10.
Item. I give to "my sister Ann [Miller] Burnett [Burnap] all my moveable goods."
Item. "My cousin Ann [Burnap] Bullard My House and land in Roxbury."
Item. "To Cousin Ann [Burnap] Bullard's eldest daughter Abigail Wight £5" and her brother Thomas Burnett.
Item. "Cousin John Bowles three children 20 sh. each and Sarah [Burnap] Southricke my best coverlid."
Cousin Robert Burnett and Isaac Bullard executors.

NOTE.—In 1682/3, Margaret (Miller) Waterman is said to have signed some paper that caused the Court to allow Ann Bullard of Dedham to be administratrix.

SUMMARY

That Joseph Miller of Bishop's Stortford was a passenger on the *Hopewell* Sept., 1635, and that the same Joseph Miller married Mary Pope and settled in Newton, Mass., is substantiated by the following series of facts:

1. There was a Joseph Miller on the passenger list of the *Hopewell* which sailed from Plymouth, England, in Sept. 1635 as exhibited in the Public Record Office of London.

2. Joseph Miller of Stortford was the brother of Elizabeth Miller Heath, wife of Isaac Heath, and a passenger on the *Hopewell* Sept., 1635. On the same ship was Joseph Miller, recorded as "age 15." Genealogists generally agree that "ages" given on passenger lists were usually approximate.

3. Naturally Elizabeth, his oldest sister, 42 years, and old enough to be his mother and well-to-do, took her young orphaned brother, without property, to the new world.

4. There are no references to Joseph Miller in the vital and church records of Bishop's Stortford after 1635.

5. Extensive and diligent search in the vicinity of Stortford failed to discover the death or marriage of any Joseph Miller, born between 1615 and 1620.

6. Joseph as a given name was most uncommon before 1620. From 1561 to 1616 in Stortford 256 children were named John and only *one* named Joseph.

7. Joseph Miller of Newton and Charlestown named four out of his six children after his own brothers and sisters. His first-born son was Joseph, named after himself. His second son was named Thomas in honor of his father—a common practice in Bishop's Stortford. He was the only Joseph Miller in America that could qualify, in the matter of age and naming of children, as the father of Joseph Miller's children. He named one daughter Anne and another Elizabeth after two of his sisters who lived in Roxbury.

8. Three sisters of Joseph Miller of Stortford migrated to Roxbury between 1635 and 1641 in accordance with Roxbury wills.

9. In 1679 Joseph Miller, living in Newton, went to Roxbury to take the "oath of allegiance." (See Boston City Document 100.) In that year his sister Margaret Waterman, a widow, was living in Roxbury or Dedham. She died 1682/3. His sister Agnes Burnap was living in Reading, Mass. His sister Elizabeth Heath died in 1664.

JOSEPH MILLER
OF NEWTON, MASSACHUSETTS

AND SOME OF HIS DESCENDANTS

JOSEPH MILLER OF NEWTON, MASSACHUSETTS, AND SOME OF HIS DESCENDANTS

Joseph Miller of Newton, Massachusetts, was the 13th child of Mr. Thomas Miller, M.A., of Bishop's Stortford, and his wife Agnes. He was baptized in Bishop's Stortford on Dec. 30, 1616, and is the Joseph Miller, "aged 15" (actually 18) who emigrated on the *Hopewell* September 1635, in company with his eldest sister Elizabeth Miller Heath, "age 40" (actually 42½), the oldest daughter of Mr. Thomas Miller, baptized March 3, 1593.

One of the most convincing proofs of the identity of Joseph Miller is that on the original lists of the *Hopewell* which sailed from Plymouth, England, on September 11, 1635 in the Public Record office in London, the name of Joseph Miller appears in a group on the same page of the passenger list with some of his relatives from Bishop's Stortford, Isaac Heath, his brother-in-law, Elizabeth Heath, his sister, Elizabeth, his niece, Martha, a cousin, William Lyon, a boy traveling in care of Isaac Heath, Grace Stokes and Thos. Bull. Furthermore these names are all in the same handwriting. The list of names is reproduced by photostat from the original records in the Public Record office, London, November 1938, by the College of Arms through the courtesy of Dr. A. T. Butler, the Windsor *Herald*.

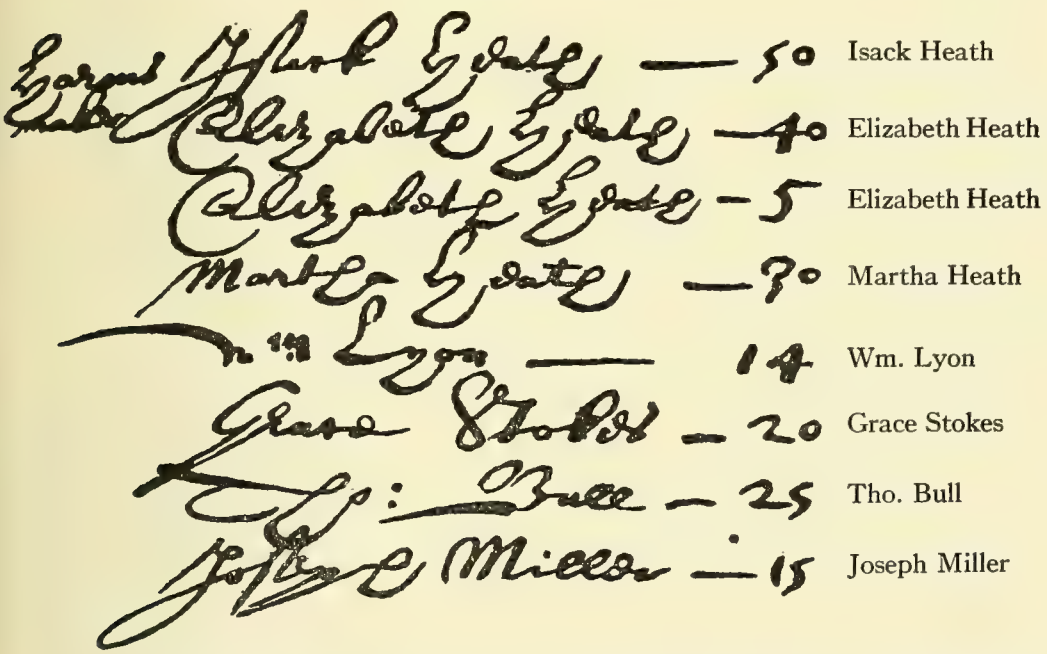

Isack Heath, "age 50," arms maker, came from Little Amwell where Agnes (Miller) Burnap, sister of Mrs. Elizabeth (Miller) Heath, and wife of Robert Burnap, lived from 1634 to 1638.

Elizabeth Heath, "age 40," married Isaac Heath about 1628. Baptized 1593 she was 42½ years old—age 40 is an error.

Elizabeth Heath, "age 5," was the only child of Elizabeth and Isaac.

Martha Heath, "age 30," was a niece of Isaac and dau. of William.

William Lyon, 14 years old, bp. at Heston near London, Dec. 23, 1620, traveling in care of Isaac Heath (*Lyon Genealogy*).

Grace Stokes, "age 20," probably the nurse of baby Elizabeth Heath or governess of the boy William Lyon.

Thomas Bull, "age 25," possibly Thomas Bull of Bishop's Stortford, settled in Hartford and deposed in 1681 that he was about 75 years old. Hence, in 1635 he was 29 years old—an error of four years.

Joseph Miller, "age 15," was born 1616—an error of three years.

The entries in one handwriting, probably with a quill-pen, contain several errors as follows: The letter "t" in the first three Heaths is not crossed. The letter "i" and the letter "t" in the name Elizabeth, which appears twice, have undotted i's and uncrossed t's. All of these errors confirm the oft-stated opinion that these records are unreliable.

The Heath family with Joseph Miller arrived in Roxbury in November, 1635. Naturally Joseph Miller would at first join the family of Isaac Heath.

Town Records of Cambridge, Mass., show that Joseph Miller found work there in 1635 or '36. Clapp's *Hist. of Dorchester* records "Joseph Miller of Dorchester," who settled in Newton. At the settlement of the estate of Nathaniel Sparhawk, who died June 27, 1647, Joseph Miller owed the estate *2s 11d* (*N.E.H.G. Register*, v. 7, p. 176).

On June 4, 1652, as a "proprietor of Cambridge," Joseph Miller was granted Lot No. 25, containing 15 acres, in Shawshine (Billerica) (*Camb. Town Records*, 97). Two years later on Dec. 22, 1654, at a county court held in Charlestown, Mary Brigham of Cambridge appeared (in court files) upon a warrant of Joseph Miller.

On Sept. 7, 1668, Joseph Miller deposed in Middlesex Court (File 17, No. 5) and stated that he was about 48 years old. If he was the Joseph Miller of Bishop's Stortford his actual age would have been a little over 51 years—not a serious discrepancy.

In 1674 Joseph Miller with his wife and family moved from Charlestown and settled in "Cambridge Village," now Newton (Jackson's *History of Newton*), where in 1676, he was chosen surveyor of highways (Paige's *Hist. Camb.*). He was one of 52 persons inhabitants of "Cambridge Village," who on May 10, 1678, petitioned that it be made a separate town (Jackson). About 1679 Joseph Miller went to Roxbury and took the oath of allegiance with Roxbury-men. Cambridge Village until 1679 was not an organized town. (Boston City Document No. 100.)

Three years later, in 1682, Joseph Miller made another deposition in which he called himself "about 64" (Wyman, *Charlestown Estates*). This is added proof that Joseph Miller came from Bishop's Stortford as his actual age would have been a little over 65.

Joseph Miller died in Newton on November 28, 1697 (Jackson's *Newton*).

The date of the marriage of Joseph Miller to Mary Pope is unknown, but it was probably about 1652. Mary Pope was the only (surviving?) child of Walter and Eleanor Pope of Charlestown. Walter Pope bought a house in Charlestown of one Wignall in 1630 (Charlestown Records, 94, 108), so it would seem probable that he was married about this time. Mary could have been born as early as 1631. Other children may have been born and died, for there was an epidemic of small pox in Charlestown in 1632. Exact dates are not known, as the early records of Charlestown were destroyed. Walter Pope died between 1635 and 1639, and naturally one-third of his estate would go to his wife Eleanor and two-thirds to his daughter Mary, his only living child (*Ibid.*).

About 1639, Walter Pope's widow Eleanor married Richard Miller (Wyman), no known relation to Joseph Miller. A Richard Miller, son of John

and Elizabeth Miller, was born in Bishop's Stortford 1593, who died in infancy. On Oct. 28, 1640, five acres of land were granted to Mary Pope, "only child of Walter Pope," who had "died previous to 1640" (Frothingham's *Hist. of Charlestown*).

Richard and Eleanor Miller had two children, James, born on June 3, 1642, and Hannah, born in 1643 (Wyman). "Elinor Milior" joined the church in Charlestown Nov. 4, 1643 (*Ibid.*). Richard Miller died about 1648 (*Ibid.*), and his widow married, about 1649–50 as her third husband, Henry Harbard of Charlestown (*Ibid.*). Eleanor Harbard as a witness deposed Dec. 17, 1662 (Lawsuit Gleason *vs.* Norton & Davidson) and stated she was 60 or thereabouts; hence she was born about 1602. She died in Charlestown Nov. 17, 1667 (Wyman and Court Files Middlx Co.).

Henry Harbard, who had married another wife, Elizabeth George, widow, made his will August 29, 1676, which was proved Dec. 18, 1677 (Court Rec.). One clause in his will is quoted as follows:

"It. I give unto all the children of Joseph Miller after my wife's decease all the land and ground that I had and did enjoy by *my former wife their grandmother* to them and every [one] of them equally to be divided, I say all that did belong to their grandmother and not only that land which was sometime their grandmother's but also I give unto Joseph Miller's children that land I purchased of Goodman Killcupp I mean that part of it that lies within the fence whereon the Hay housing stands; the other part next the water side I dispose of otherwise" (Middlx. Probate, No. 11188).

Henry Harbard died in Charlestown Oct. 22, 1677 (Charlestown Rec.). But before his will was probated the following agreement was entered into:

"Articles of Agreement between Elizabeth Herbert, widow, and James Miller executors of the last will of Henry Herbert deceded on the one part and Joseph Miller, husband to Walter Pope's only daughter Mary, on the other part, was made 7th day of November, 1677.

"It is agreed that Joseph Miller have present possession of the house of the aforesaid Henry Herbert built and lived in till his decease, with all the land thereunto adjoyneing bounded with the land of Mr. Joseph Lindes on the noewest and the Creeke on the southwest for all which the aforesaide executors paye Joseph Miller five shillings rent until March next.

"2dly It is agreed that the aforesaid James Miller shall have and injoy a peece of land about two accres lying next Charlestown Comon which was bought by the aforesaid Henry Herbert of William Kileny and possession given by the said Herbert to James Miller since the making of his will as appears by the testimony of —— Bralier [Edw. Brasier or Brazier] and Jno Greene and severall others, on which James Miller began to build and fence before the said Henry Herbert's death.

"In witness of the premises the above mentioned partyes have hereunto set their hands dated as above.

(Signed) "Elizab; Herbert
her marke
James Miller

Joseph Miller
Mary Miller"

(Middlesex County Registry of Deeds, 6:1470).

JOSEPH MILLER'S CHILDREN NAMED AFTER ROXBURY RELATIVES

After their marriage, about 1652, Joseph Miller and Mary Pope had several children: Joseph, named for his father; Jane, after his own cousin Jane Miller

who married John Chandler, brother of Margaret (Chandler) Denison; Anna or Hannah, probably named after Joseph's sister Ann Burnap, who though baptized as Agnes, was called Ann when she married Robert Burnap; Elizabeth, undoubtedly named after Joseph's sister Elizabeth Heath; Thomas, undoubtedly named after Joseph's revered father, Mr. Thomas Miller, M.A., of Bishop's Stortford; and Samuel.

Mary (Pope) Miller lived on in Newton after the death of her husband in 1697, and died there March 14, 1710 (Jackson's *History of Newton*).

First Generation in America

1. Joseph[1] Miller bp. at Bishop's Stortford, co. Herts, England, Dec. 30, 1616 (O.S.), son of Mr. Thoams (John, John) Miller; emigrated to New England on "Hopewell," 1635, probably lived in Roxbury, then in 1636 in Cambridge, Mass., up to about 1652, when he married Mary Pope, only child of Walter and Eleanor Pope of Charlestown: moved with his family to West Newton, Mass., in 1674, where he died Nov. 28, 1697, and his widow died March 14, 1710.

Children (Miller):

2. i. Joseph[2]*, b. probably in Charlestown about 1656; died a bachelor in Newton Feb. 12, 1710. On Feb. 7, 1705/6 he deeded his "home, tenement, housing and lands, adjoining his brother Thomas Miller on ye west" to his loving brother Samuel Miller husbandman, "for and in consideration of love and goodwill and affection which I have and do beare towards my loving Brother" (Mddlx. Co. Deeds, 1706–7).
3. ii. Jane[2], b. probably in Charlestown about 1661; died in Newton August 31, 1719, unamrried. She quitclaims her interest "of that estate . . . yt. my honored father Joseph Miller late of Newton, decs. was possessed of" (Mddlx. Co. Deeds, B. 16 p. 534).
4. iii. Anna[2] (Hannah), b. 1665–6 probably in Charlestown; died in Newton Sept. 30, 1741, aged 76, unmarried. Date of death from private records in Hyde Family Bible, neighbors in Newton, Mass.

\+ 5. iv. Elizabeth[2], b. about 1670, in Charlestown.

\+ 6. v. Thomas[2], bp. April 9, 1675, in "Cambridge Village" (Paige).

\+ 7. vi. Samuel[2], bp. Sept. 24, 1678, in "Cambridge Village" (Paige).

Second Generation

5. Elizabeth[2] Miller born about 1670 in Charlestown; married Apr. 5, 1694, as his second wife, John Park, son of Thomas and Abigail (Dix) Park. He was born in Newton, Sep. 6, 1656, and died March 21, 1718. Will of John Park mentions "wife Elizabeth administratrix."

Children (Park):

8. i. Elizabeth[3], b. Feb. 24, 1695; died young.
9. ii. John[3], b. Dec. 20, 1696 in Newton; mar. July 14, 1720, Abigail Lawrence of Newton. He died May 21, 1747. Six children.

---

* Joseph Miller, Jr. and not his father, was made a Freeman of the Massachusetts Bay Colony July 25, 1685. At the same time six others, well identified citizens of Newton, were all made Freemen.

1. Joseph Miller, aged about 29.
2. Capt. Noah Wiswell, aged 47.
3. Edward Jackson, aged 33.
4. William Robinson, aged about 35.
5. Joseph Wilson, age 30.
6. John Miricke, about 25.
7. Samuel Truesdale, aged 39.

"*These* are all *above* 24 years of age."
(Mass. Archives, Vol. 106, page 510.)

10. iii. Solomon[3], b. Oct. 16, 1699, Newton; mar. June 21, 1722, Lydia Lawrence of Newton. He died Jan. 3, 1754. Seven children.
11. iv. Elizabeth[3], b. Feb. 27, 1701, Newton; mar. Nov. 30, 1720, Joseph Morse of Newton.
12. v. Abigail[3], b. April 20, 1702, Newton; mar. June 16, 1724, Nathaniel Whittemore.
13. vi. Rev. Joseph[3], b. Mar. 12, 1705, Newton; mar. June 15, 1732, Abigail Greene. He died Mar. 1, 1777. Nine children.
14. vii. Mary[3], b. Mar. 17, 1708, Newton; mar. July 13, 1727, Isaac Sanger.

AUTHORITY

Avery, Fairchild and Park Families, 1919, page 96.

6. THOMAS[2] MILLER, bp. Apr. 9, 1675, in Newton, Mass. married 1st, Mar. 23, 1710, Elizabeth Fuller, da. of Joshua Fuller; married 2nd about 1712, Experience Fuller, sister of his first wife. He built a house on Fuller St. before 1705, which later was inherited by his son. Thomas[2] Miller died Nov. 4, 1713, age 38.

Children (Miller):
By his first wife Elizabeth Fuller:
15. i. Elizabeth[3], b. Jan. 20, 1711; died Aug. 17, 1713.

By his second wife Experience Fuller:
+ 16. ii. Thomas[3], b. May 5, 1713.

7. SAMUEL[2] MILLER (deacon) bp. Sept. 24, 1678 in Newton, married in Watertown, Nov. 11, 1708, Elizabeth Child, b. July 4, 1681, dau. of Richard Child and his 2nd wife Hannah Train; moved to Worcester, Mass., 1747; died in Worcester Sept. 9, 1759; interred in Worcester Common near City Hall.

Samuel Miller became a deacon of distinction in the Congregational Church in Newton and Worcester. In 1720–1, at a meeting of the selectmen, Deacon Samuel Miller was present and it was reported that:

"Mr. Samuel Miller promising before the town in said meeting that he would find room in his own house to keep school in and not charge the town anything for the use of it, the inhabitants did voat yt the school should be kept att ye house of said Mr. Samuel Miller for the present or ensuing year" (*Hist. of Middlesex Co.*, 3:51).

In 1726 "Samuel Miller gives to the town of Newton four rods of land, for the west school house, near his dwelling house, on the proprietor's way, so long as the school house shall be continued there for the use of the schooling and for no other use" (Smith's *Hist. of Newton*, p. 113).

William Lincoln, historian, said of Samuel Miller that he "was a soldier of Capt. Church in the Indian War, was wounded severely, and carried a musket ball received in fight to his grave." Samuel Miller was chosen selectman in Newton 1743, on committee to permit free passage of fish up the Charles River 1744. In 1747, when he moved to Worcester, he purchased there a house which was described in a real estate transfer as a "mansion house of one and a half stories." In 1749, Samuel Miller deeded his 117-acre farm and homestead to his son Samuel, Jr., the latter giving his mortgage for security, and this mortgage was to be "null and void provided Samuel Miller, Jr., after the death of both parents paid £25. to his sister Mary Hall of Newton, a like sum to his sister Elizabeth Hammond of Charlton and to his brother the eldest son Joseph Miller of Westminster £57. 10 s. All these obligatins were duly satisfied" (Worcester Court Records).

The will of Deacon Samuel Miller was dated Jan. 1, 1759, and was "allowed" Jan. 5, 1760. In it he mentions his wife Elizabeth and his children Joseph Miller, Samuel Miller, Jr., Mary Hall and Elizabeth Hammond.

Children (Miller):

+ 17. i. Mary[3] b. April 20, 1710, in Newton.
+ 18. ii. Elizabeth[3] b. Aug. 22, 1713, Newton.
+ 19. iii. Joseph[3] bp. July 29, 1716, Newton.
+ 20. iv. Samuel[3] b. Dec. 20, 1718, Newton.
21. v. Ephriam[3] b. June 21, 1725, Newton—probably named after Ephriam Child, a great-uncle of Elizabeth[3] (Richard[2], William[1]) Child. Ephriam died in 1735 aged 10 years.

THIRD GENERATION

16. THOMAS[3] MILLER, born in Newton, May 5, 1713; married, 1740, Mary Whiting, widow, of Dedham who died in 1769, aged 51; he died June 11, 1775, aged 62 (will No. 15214 Court House, East Cambridge, Mass.)

Children (Miller):

22. i. Thomas[4], b. 1741, d. 1744.
23. ii. Timothy[4], b. 1743, d. 1744.
24. iii. Mary[4], b. 1745.
+ 25. iv. Thomas[4], b. Mar. 9, 1747.
+ 26. v. Timothy[4], b. Jul. 15, 1750.
27. vi. Sarah[4], b. 1752, d. 1756.
28. vii. Joseph[4], b. 1754, d. 1758.
29. viii. Samuel[4], b. 1756.
30. ix. Sarah[4], b. 1760.

17. MARY[3] MILLER, da. of Samuel, born Apr. 20, 1710; married May 21, 1730, Edward Hall of Newton, son of Andrew Hall. Edward died in 1794 (Jackson, *Hist. of Newton*).

Children (Hall):

31. i. Elizabeth[4], b. Jul. 23, 1732.
32. ii. Mary[4], b. Mar. 7, 1734.
33. iii. Ephriam[4], b. Jul. 31, 1736; m. Eliza. Carter, 1756.
34. iv. Elisha[4], b. Sep. 14, 1738.
35. v. Dorcas[4], b. Feb. 28, 1741; mar. 1761 Jeremiah Richardson.
36. vi. Esther[4], b. Jul. 24, 1746.
37. vii. Edward[4], b. Jan. 16, 1749.
mar. Esther Fuller 1772. Their da. Lucy m. Capt. Samuel Hyde, Oct. 1800.
38. viii. Rebecca[4], b. Sep. 10, 1753

18. ELIZABETH[3] MILLER, da. of Samuel, b. Aug. 22, 1713; mar. Nov. 1, 1739, Jonas[4] (Nathaniel[3], Nathaniel[2], Thomas[1]) Hammond and settled in Charlton, Mass. (Jackson).

Children (Hammond):

39. i. Margaret[4], b. 1740.
40. ii. James[4], b. Dec. 20, 1742; d. 1767, prob. unmarried.
41. iii. Elizabeth[4], b. Apr. 13, 1745.
42. iv. Mary[4], b. Feb. 19, 1748; d. Mar. 19, 1748.
43. v. Mary[4], b. Feb. 2, 1749; mar. Saml. Robinson.
44. vi. Hannah[4], b. May 30, 1751; mar. David Dunbar.
45. vii. Lydia[4]?

19. JOSEPH[3] MILLER bp. July 29, 1716; married in 1740 Mary Williams dau. of Isaac Williams and Martha Whitman his wife; died in Westminster, Mass., in 1794 aged 77.

Joseph Miller was the pioneer of the Miller family in Westminster when it was called "The Wilds of Narragansett."

Children (Miller):

46. i. Joseph[4] *, bp. July 27, 1741, Newton; married Lucy Walker.
47. ii. Mary[4], bp. Mar. 16, 1743; married Thomas Keyes.
+ 48. iii. Ephriam[4] *, bp. Sept. 16, 1744; m. Beulah Wheeler.
49. iv. Martha[4], bp. Sept. 11, 1746; mar. Samuel Sawin.
50. v. David[4], bp. Aug. 8, 1748; probably died young.
51. vi. John[4], bp. Aug. 7, 1750; died the following day.
52. vii. Samuel[4] *, bp. July 20, 1751; mar. Lydia Cutting.
53. viii. Isaac[4] *, b. Mar. 31, 1754; mar. Sarah Bennett. Descendants moved to Ashburnham, Mass., and the history of that town (page 839) records that Joseph[3] Miller of Westminster was an assessor, selectman, treasurer, a deacon of the church and a representative.
54. ix. Esther[4], b. Mar. 9, 1756; died Oct. 17, 1850, unmarried.
55. x. Elizabeth[4], b. Mar. 16, 1758; mar. Stephen Holden.
56. xi. John[4], b. Sept. 22, 1762; probably died young.
57. xii. Phoebe[4], b. Feb. 2, 1766; mar. Thomas Damon.

20. SAMUEL[3] MILLER, born Dec. 20, 1718 in Newton, "Cambridge Village," Mass.; married in Newton, Feb. 3, 1742/3, Elizabeth Hammond, born Feb. 14, 1719, died Jan. 1801, dau. of Lieut. Thomas Hammond (Nathaniel[2], Thomas[1]) of Newton (*Hammond Genealogy*), d. in Worcester about July 8, 1783. The *Mass. Spy* for July 10, 1783, records the death of Deacon Samuel Miller "a truly honest man."

Children (Miller):

+ 58. i. Ephriam[4], b. June 4, 1744, Newton.
+ 59. ii. Moses[4], b. Dec. 5, 1745, Newton.
60. iii. Josiah[4], bp. May 2, 1748, Worcester; d. Dec. 26, 1748/9 in Worcester.
61. iv. Elizabeth[4], twin to Sarah, b. Sep. 19, 1750, Worcester; probably died in infancy.
62. v. Sarah[4], b. Sept. 19, 1750, Worcester, twin to Elizabeth; mar. Nov. 27, 1770, Moses Wiley Gray, b. Dec. 31, 1745 in Worcester, son of Robert Gray and Sarah Wiley. They removed to Templeton, Mass., and in 1787 to Grafton, Vt., where Sarah (Miller) Gray died March 2, 1793. Moses Wiley Gray was a Minute Man at the Battle of Lexington. Among the children of Moses and Sarah was Moses[5] Gray, born in Templeton, Feb. 26, 1785, he married Roxana Howard of Sauquoit, Oneida County, New York State, July 30, 1809, and their first child was Prof. Asa[6] Gray, born Nov. 18, 1810 in Sauquoit, east part of Paris, Oneida County, N. Y. He was the distinguished botanist of Harvard College and intimate friend of Darwin in England, whom he visited on several occasions. Gray's *Botany* is universally recognized as a standard work. His bust was placed in the Hall of Fame in New York University, May 21, 1925. Prof. Gray in his *Memoirs* said: "My grandfather was Dea. Samuel Miller of Worcester, Mass."
63. vi. Elizabeth[4], b. Aug. 9, 1752, Worcester; died after 1785, prob. unmarried.
64. vii. Anna[4], b. Nov. 9, 1755, Worcester; mar. June 6, 1782, Dea. Amos[6] Stone (Jonas[5], John[4], Ebenezer[3], Simon[2], Simon[1]) Stone. They moved from Newton to Petersham. They had a son Samuel and a daughter Nancy. Anna died 1787. Amos Stone mar. 2nd Susan Hawes 1789. Amos died 1802, aged 49 (Bartlett's *Simon Stone Gen.* and *Worc. Antiq.* Vol. 12).
65. viii. Eunice[4], b. May 27, 1761, Worcester.

* Joseph, Ephraim, Samuel and Isaac Miller all served as soldiers under Captain Whitney in the War of the Revolution (Haywood, *History of Westminster, Mass.*).

FOURTH GENERATION

25. THOMAS[4] MILLER, born Mar. 9, 1747; married, 1769, Mary Fuller, dau. of Ensign Josiah Fuller, a soldier who was killed at Ticonderoga, N. Y., in 1775. Hyde Bible record states Thomas Miller died Dec. 6, 1776; his will is found in East Cambridge Court House No. 15214–6.

Children (Miller):

\+ 66. i. Joseph[5], b. Oct. 5, 1770.
67. ii. Mary[5], b. Jul. 24, 1772.
68. iii. Sarah[5], b. Jul. 20, 1774.

26. TIMOTHY[4] MILLER, born in Newton, Mass., July 15, 1750; settled in Sudbury, Rutland Co., Vermont (originally Charlotte Co., N. Y.), in 1771 or 1773. Married Nov. 14, 1774, Deborah ——, born Nov. 9, 1758. Died Oct. 3, 1842 aged 84. He died in Sudbury "a highly respected citizen," Nov. 16, 1824, aged 75 (*History of Rutland Co.* and *Hist. of Sudbury, Vt.*).

Children (Miller):

69. i. Sarah[5], b. Oct. 3, 1776.
70. ii. Thomas[5], b. Feb. 17, 1779.
71. iii. Timothy[5], Jr. b. Nov. 8, 1782; d. Nov. 26, 1859.
72. iv. Mary[5], b. May 27, 1784.
73. v. Betty[5], b. Sept. 28, 1787.
74. vi. Rebecah[5], b. May 25, 1789.
75. vii. Deborah[5], twin to Rebecah b. May 25, 1789.

48. EPHRAIM[4] MILLER, son of Joseph of Westminster, born Sept. 16, 1744, served as a soldier under Captain Whitney; married May 20, 1768, Beulah Wheeler; he died June 26, 1828, age 83; his wife died Nov. 3, 1824, age 84. Ephraim Miller inherited the homestead and a large share of the landed possessions of his father.

Child (Miller):

\+ 76. i. John[5], b. July 25, 1774; m. Lucy Golding; moved to Worcester.

58. EPHRAIM[4] MILLER, baptized in Newton, Mass., June 4, 1744; married in Holden, Feb. 20, 1770, Mary Flagg, born Sept. 26, 1746, daughter of Richard and Grace Flagg of Holden, Mass. (Holden V. R.) On April 24, 1775, he was listed as a private under Jonas Hubbard. At the time of his death, Jan. 14, 1834, age 89, he ranked as a lieutenant; he was buried at Chester, Mass. His wife died 1813, age 66. (Chester V. R.)

Children (Miller):

77. i. Samuel[5], b. Feb. 3, 1771, Worcester. Married Mehitabel about 1795. Their children recorded in Chester, Mass.
78. ii. Molly[5], b. Aug. 6, 1772, Worcester.
79. iii. Ephraim[5], Jr. b. June 8, 1774, Worcester; m. Feb. 24, 1800, Rachel Buttolph of Worthington, Mass.
80. iv. James[5], b. Jan. 1, 1776, Worcester.
81. v. Silas[5], b. Mar. 19, 1778, Worcester.
82. vi. Levi[5], b. Jun. 15, 1780, Worcester.
83. vii. William[5], b. Jun. 16, 1782, Worcester.
84. viii. Dolly Flagg[5], b. Dec. 5, 1784, Worcester.

59. MOSES[4] MILLER, born Dec. 5, baptized Dec. 8, 1745, at Newton, Mass.; married in Worcester, Mass., Dec. 1, 1772, Sarah Gray, sister of Moses Wiley Gray, his brother-in-law. She was born March 30, 1742/3, in Worcester, the daughter of Robert Gray and Sarah (Wiley) Gray. She died Sept. 17, 1827, in Heath, Mass., in the home of her son, the Rev. Moses Miller. Moses died in August, 1834, in Heath, aged 90, in the home of his son.

It is interesting to note that Moses Miller and his sister Sarah (or Sally)

(No. 62), both of them Congregationalists, should have married Sarah Gray and her brother Moses Wiley Gray, both of them children of Robert Gray and Sarah (Wiley) Gray, Scotch Presbyterians. A great exodus of Scotch families from the north of Ireland to New England occurred in 1718–19, many of whom settled in Worcester, Mass. Their treatment by the Congregationalists was almost unbelievably disgraceful as may be seen by consulting Lincoln's *History of Worcester.*

These essentially fanatical events occurred about a generation before the Miller families moved from Newton to Worcester, in 1747, and the Scotch Presbyterians had joined with the Congregationalists in the Old South Church. But the enmity directed against the Scots while outwardly not apparent still remained in a lesser degree in the form of prejudice. These two Scotch-English marriages must have been accompanied by unhappy opposition and cruel taunts towards the Scots, charging them with being Irish, who were more unpopular then than they are to-day. One cannot but feel a great sympathy for Moses Miller and his Scotch wife, Sally Gray, who, in spite of prejudices remained in the Miller homestead and raised a family. But, on the other hand, Moses Wiley Gray and his wife, Sally Miller (No. 62), actually moved away from Worcester and settled in Templeton, Mass., thence to Grafton, Vt., where Sarah Miller Gray died at the early age of 43 years.

Children (Miller):

85. i. Josiah[5], b. Oct. 13, 1773, Worcester, was living in 1790; never married.
86. ii. Sarah[5], b. Mar. 25, 1775, Worcester; died in childhood.
\+ 87. iii. Rev. Moses[5], b. Nov. 23, 1776, Worcester.
88. iv. Thomas[5], b. Nov. 29, 1778, Worcester; never married.
89. v. John[5], b. Nov. 4, 1782, Worcester; never married.
90. vi. Samuel[5], b. Jan. 14, 1786, Worcester.

Fifth Generation

66. Joseph[5] Miller, born Oct. 5, 1770, in Newton; married April 24, 1803, Hepsibah Bartlett, dau. of David and Hannah (Beals), b. Feb. 28, 1780.

Child (Miller):

91. i. Thomas[6], b. Sept. 10, 1809; no issue found. (See *Bartlett Genealogy* by A. E. Hibner & Jackson's *Hist. Newton.*)

76. John[5] Miller, born 1774; married about 1798, Lucy Golding, who died in 1849, aged 72. He died 1828, aged 53. He moved to Worcester.

Child (Miller):

\+ 92. i. Henry W.[6], b. Sept. 9, 1800, in Worcester, Mass.

87. Rev. Moses[5] Miller, M.A., born Nov. 23, 1776, in Worcester, Mass.; married in Conway, Mass., Oct. 13, 1806, Bethia Avery Ware, b. Mar. 17, 1780, in Conway; died Aug. 17, 1848, in Portage, N. Y., da. of Dea. Samuel Ware and Bethia Avery, his wife. He died April 22, 1855, in Chicago, Ill. The Rev. Moses Miller was a towering personality, a heavily built man, six feet five inches tall, and well-known in his time among the ministers and colleges in western Massachusetts. He entered Brown University in 1796, and graduated with the Master of Arts degree in 1800, and was a tutor and theological student at Brown until 1804. He then became pastor of the church at Heath on Dec. 26, 1804, serving until April 21, 1840. He was pastor at West Hawley, Mass., from 1840 until 1846, then moved to and lived in Nunda, Livingston County, N. Y., from 1846 to 1847; thence to Portage, 1847–1848, the year his wife died, after which he went to Moscow, N. Y., to be with his daughter Hanna and son-in-law Rev. Lemuel Leonard. Later on he lived in Brookfield, Mass., with his daughter Bethia and his son-in-law Rev. Washington Adams Nichols. In 1852

delivered an historical address in Heath; in the autumn of 1854, went to the home of Rev. W. A. Nichols in Chicago, dying in April of the following year.

Children (Miller):

93. i. Samuel Ware,[6] b. July 18, 1807, Heath; d. Aug. 26, 1828, age 21.

94. ii. Sarah[6], b. Aug. 6, 1809, Heath; mar. Sept. 20, 1831, Dea. Aaron Dickinson, b. July 5, 1802; d. Mar. 2, 1874; she d. July 14, 1843. They had: (1) William Miller b. Nov. 9, 1832; d. Sep. 15, 1836. (2) Cornelius Everetts b. Apr. 23, 1835. The Rev. Cornelius E. Dickinson, pastor in Marietta, Ohio and Oak Park, Ill. (3) Sarah Miller, b. Mar. 23, 1837 in Adams, Mass.; m. Edward Hart Leavitt. (4) Samuel Fowler, b. Jul. 25, 1839, in Williamstown, Mass. (5) Mary Esther b. Sep. 19, 1842, d. 1843.

95. iii. Mary[6], b. Apr. 5, 1811, Heath; mar. June 8, 1831, Hart Leavitt, brother of the late Joshua Leavitt, D.D., of the New York *Independent.* They had Mary, b. Mar. 11, 1833. The senior Mary Miller died Dec. 2, 1833. Her widower married twice afterwards and was the father of Edwin and Joshua Leavitt.

96. iv. Hannah Billings[6], b. Feb. 26, 1813, Heath; mar. in Heath, Mass., Nov. 19, 1839, Rev. Lemuel Leonard of Portage, N. Y. She d. Oct. 3, 1862 in Detroit. They had: (1) Abbie, b. Nov. 11, 1842; d. May 18, 1877. (2) Mary Ware, b. Sept. 24, 1844; mar. Mar. 16. 1866 or '67 at Washington, Capt. Frank R. Rich. (3) Frances Hannah, b. July 30, 1846; d. Nov. 3, 1865. (4) William Miller, b. Nov. 26, 1848 in Moscow, Livingston Co., New York; died Nov. 2, 1849. (5) Alice S., b. Oct. 9, 1850 in Moscow; became a teacher in Marietta, Ohio; lived in Lake Forest in 1926.

97. v. Bethia Avery[6], b. Feb. 17, 1815, Heath; m. (int.) Sept. 25, 1838, Rev. Washington A. Nichols of Portage, N. Y. They settled in Brookfield, Mass., then moved to Chicago in 1853, where he was pastor of a church, then moved to Lake Forest establishing a private school 1864. She d. Nov. 11, 1865, in Chicago. They had (1) Thomas Spencer, b. 1843, d. 1851. (2) William Adams, b. 1845, d. 1846. (3) Dwight Miller, b. Heath 1852, d. 1853—all born and died in Brookfield. The Rev. W. A. Nichols d. Jun. 25, 1901, age 91.

98. vi. Thomas Spencer[6], b. May 27, 1817, Heath; graduated at Amherst in 1839; tutored at Amherst College from 1841 to 1843; died unmarried, July 31, 1843, in Heath, Mass.

99. vii. Moses Alexander[6], b. Feb. 21, 1819, Heath; d. Nov. 9, 1841, age 21 in Heath.

100. viii. William[6], b. Jan. 23, 1820, Heath; d. Feb. 23, 1823, age 3 in Heath.

+101. ix. Samuel Fisher[6], b. Oct. 5, 1822, Heath.

Sixth Generation

92. Henry W.[6] Miller, son of John, b. Sept. 9, 1800, in Worcester, Mass.; married (1st) May 21, 1829, Nancy Merrick, who died April 1, 1843; married (2nd) Mary Andrews, died May 31, 1891; one of Worcester's distinguished citizens and merchants.

Children (Miller), all by first wife Nancy Merrick:

102. i. Ruth Ann[7], b. May 20, 1830; mar. Oct. 13, 1862, as his 2nd wife, Hon. George Frisbie Hoar (1826–1904) of Worcester, a distinguished Republican senator representing the State of Mass. at Washington, D. C. The senator's wife died in Worcester Dec. 24, 1903, aged 73. No issue.

103. ii. Lucy Maria[7], b. Mar. 21, 1832; d. Mar. 1, 1833.

104. iii. Alice Maria[7], b. Jul. 22, 1840; mar. the Hon. Wm. W. Rice, U. S. Congressman. 1876–1886. No issue.

101. Prof. SAMUEL FISHER[6] MILLER, born Oct. 5, 1822 in Heath, Mass.; grad. 1848 Amherst College, M.A. degree. Civil engineer on Troy & Boston Ry. 1849–50. Married in Brookfield, Mass., June 18, 1851, Charlotte Howe, born Jan. 1, 1826; died Nov. 25, 1863, at Lake Forest, Ill., age 37, the dau. of Wm. Howe, Jr. of Brookfield and Almira Lyon, dau. of Benjamin and Priscilla Paine Lyon of Woodstock, Conn. Mt. Holyoke Seminary, Class of 1846. He moved to Chicago and Waukegan, Ill., 1853; construction engineer Chicago & Milwaukee R. R. Principal, Lake Forest Academy 1858. Wife died 1863. Married (2nd) Aug. 27, 1867, Alma Filia Emerson of Amherst, Mass., dau. of the late Dr. Joseph Emerson of Heath. Settled at Amherst College 1868, Prof. of Mathematics and Engineering. He died Oct. 28, 1870; she died Nov. 8, 1902.

Children (Miller):

105. i. Annie[7], b. July 15, 1852, in Brookfield, Mass.; d. unm. Nov. 9, 1919.

106. ii. Mary Fisher, b. Apr. 2, 1855; d. Sept. 11, 1855; b. and d. in Waukegan.

107. iii. Walter Howe[7], b. Mar. 11, 1857, in Cleaverville, now Chicago; d. Mar. 3, 1929, in Chicago; m. Oct. 16, 1879, Rowena Paul Fobes, b. Aug. 5, 1860; d. Feb. 24, 1939, in Los Angeles, Cal. President of Miller & Hart (packers) in Chicago. Had: (1) Walter, b. Apr. 3, 1882; served with distinction in Red Cross in Italy, World War; died June 29, 1925. (2) Charlotte Rowena, b. Aug. 19, 1880; m. Mar. 4, 1898, Arthur R. McDougall, who died July 17, 1937. Three children.

108. iv. Spencer[7]*, b. April 25, 1859; grad. Worcester Polytechnic, 1879, B.S.; Doctor of Engineering (Worcester), 1928; m. Hattie M. Ruggles Jan. 1, 1885; born June 6, 1857; died Jan. 8, 1930. Had: (1) Marguerite R., b. Dec. 10, 1888; m. June 19, 1915, Pierrepont Edward Grannis of New York. Two children. (2) Spencer, Jr., b. July 2, 1891; grad. B.A. Amherst, 1912; M.A. Columbia Univ., 1914, LL.D. Kenyon College, 1937; mar. Oct. 27, 1928, Margaret Montague Geer. Three children. (3) Helen Emerson, b. Jan. 25, 1897; m. Jan. 1, 1921, Aurelio Giorni; he d. Sept. 23, 1938. Three children. Spencer Miller, Sr. married (2nd) June 25, 1931, in Bishop's Stortford, England, Mrs. Lola MacDonald Sleeth.

109. v. Samuel Fisher[7], Jr., b. in Lake Forest, Ill., Sept. 19, 1861†; mar. in Boston, Mary 4, 1886, Marion E. Sleeper, b. Sept. 29, 1862; d. Jan. 4, 1932 in East Orange, N. J. Had: (1) Gladys Edwards, d. an infant. (2) Philip Francis, b. Apr. 23, 1890; d. 1933. (3) Donald Fisher, b. Apr. 8, 1894; m. Helene Tuttle. Former president Miller & Collins, Contractors, N. Y.; President Pacific Flush Tank Co., Chicago.

110. vi. Sidney Walker[7], b. in Lake Forest, Ill., Jan. 23, 1863; m. July 11, 1883, Ida Blanch Ketz. Died Nov. 14, 1910, age 47. No issue. Inventor and manufacturer of the Miller Automatic Flush Tank. Pres. Pacific Flush Tank Co., Chicago, until his death.

---

* Retired engineer. Compiler of this article.

† Died Sept. 2, 1939, at his summer home, Bay Head, N. J.

APPENDICES

APPENDICES

List of Exhibits

1. Will of John[1] Myller, 1551.
2. Will of John[2] (John[1]) Myller, 1584.
3. Will of Johan Miller, 1590, wife of John[2].
4. Will of John[3] (John[2, 1]) Miller, 1601.
5. Will of Thomas[3] (John[2, 1]) Miller, 1627.
6. Will of John Gace, 1602.
7. Will of John[4] (John[3, 2, 1]) Miller, 1640.
8. Will of Thomas[4] (Thomas[3], John[2, 1]) Miller, 1640.
9. Will of John[5] (John[4, 3, 2, 1]) Miller, 1645.
10. Will of Martha Miller, 1665/6, wife of John[4] Miller.
11. Lay Subsidies, county of Herts.
12. Bishop's Stortford, Marriage, Baptismal and Burial Records.
13. Feet of Fines, Herts.
14. Court of Sessions, Hertfordshire.
15. From Hadham Hall Manor Rolls.

Appendix 1

Will of John[2] Myller (No. 1 in accompanying article) of Stortford dated 14 June 1551.

I bequeath to my wife Katherine my messuage with garden and buildings in Stortford lying between Croked Lane alias Mylleyn on the east and the tenement of John Wyburd, late John Marshall on west and the garden lies between the garden of Robert Water on the south and my garden on the north to have and to hold to her for life with remainder to my son William and his heirs for ever; also a parcel of ground in Stortford outside the North Gate and other small pieces of land there, with remainder to my son John. Executors: my wife Katherine and son William. Witnesses: John Persmyth alias Cheyny, Edmond Browne, Thomas Dugarde, Christopher Lyster, the writer hereof.

Proved 13 February 1554/5. (Commissary Court of London, Essex & Herts—Garland 30.)

Appendix 2

Will of John[2] Myller (No. 2), the elder, of Stortford county of Herts dated 18 May 1584.

I bequeath to my wife Joan my messuage, houses and buildings wherein I now dwell with garden adjoining also my dovehouse at Hockerell Bridge for life.

To my son John the houses between my dwelling house and the mill in Stortford and my barn at North Gate and my Lynchewell meadow and the croft my father gave me at Waight Cross and my tenement at Hockerell Bridge and another tenement in Stortford in the Butchery there he paying my wife Joan £20 a year for life.

To my son Thomas my messuage called Dayne of Coyffes [Dane O'Coys] in Stortford with all lands and meadows which I bought of my father-in-law John Thurgood and my brother-in-law John Thurgood and his wife.

To my daughter Lucy my messuage in Little Hadham, County of Herts, at marriage or at age of 21; to George Hawkyn,* my daughter *Mary's* child £10; to Agnes Thurgood, daughter of my brother-in-law Nicholas; to my

---

* George Hawkyn, son of George and Mary (Miller) Hawkyn, bp. 6 Apr., 1582, mar. Beatrix (2d) and had "Mr." Edward Hawkyn, M.A., bp. 8 Oct., 1615, whose da. Elizabeth Hawkyn married John Barrington, 2d son of Sir John Barrington of Hatfield, co. Essex.

brother William Myller 40s.; to my five sisters (not named) 20s. each; to Alice Payne my girl, 20s.; to the poor of Stortford 40s.

To my wife (Joan) the felled wood, my hay and a cow; to my son John my part of Stansted Park. Residuary legatee and Executor: my son John. Overseer: my wife's brother Nicholas Thurgood.

[Signed John Myller.

Witnesses: John Thoroughgood, Nicholas Thorogood, William Barnarde scr. Simon Clarke. Proved 31 October 1584. (Ibid.)

Appendix 3

Will of Johan Miller (wife of John[2] Miller) of Stortford, widow, dated 5 October 1590.

I bequeath to my son Thomas Miller my corn growing at Dane Acoyus and my cattle, two beds, a cupboard and so forth and seven silver spoons, and a chest in which his father kept his writings.

To my daughter Mary two brass pots and a bed; to the children of my son John a cow each; to the children of my daughter Mary a cow each; to Winifred Paine a bullock; to my brother's daughter Annis Thurgood a bullock. My brother Nicholas owes me money which I give to my son Thomas.

Residuary legatee and executor: my son John.

Witnesses: Nicholas Thoorgood, William Gare† [Gary].

Proved 19 December 1590, by the executor named. (Ibid.)

Appendix 4

Will of John[3] Miller (No. 4), the elder, of Stortford dated 26 March 1601. Proved 9 Nov. 1612.

I desire to be buried in Stortford churchyard and give to the poor 40s.

To my poor Aunt Holly now dwelling with me 40s.

To my wife Elizabeth (Meade) the messuage in Stortford wherein I dwell, for life with remainder to my son John; also to my wife my furniture, my orchard and dove cote near Hockerell Bridges; also the meadow my father bought of Willies daughters beyond Waightfield all to remain to my son John.

To my daughter Agnes Miller my messuage in Stortford near Maulthill bought of Thomas Mead. To my daughter Sarah Miller in pieces of land in Great Half Acres in Stortford bought of Mr. (Thomas) Jernegan (Gent.). To my daughter Katherine Miller £80, my brother Richard Mead owes me. To my daughter Ursula a close in Stortford and £40. To my son John a messuage in Stortford during my wife's life and after to my son William to whom I give all my stalls and my lands in Little Hadham. To my three eldest daughters Joan, Margaret and Jane the money arising by sale of my cattle; my sheets and spoons and the clothes I had in their mother's time and silver which was their mother's. Money owing by my brother John Meade. Executors: My brother Thomas Miller and my brother-in-law Richard Sprenger. Witnesses: George Hawkyn (a brother-in-law). Proved 9 November 1612; by the executors named.

Appendix 5

In the will of Mr. Thomas[3] Miller, M.A., executed 17 May 1627, he does not directly bequeath money to any of his daughters. The will reads in part as follows: "So as my son John Miller or his heirs, become bound to my daughters hereafter named for the true payment of such several sums of money as by this my last will I give and bequeath unto them that is to say to Elizabeth my daughter in one bond or obligation of 60 pounds for the payment of thirty two pounds of lawful English money to her the said Elizabeth . . . within two

† Probably William Gerey the elder, buried May 1, 1611.

years . . . and to Joan my daughter in the sum of thirty pounds . . . fifteen pounds of lawful etc. within three years and also unto Margaret my daughter in one obligation of thirty pounds for the payment of fifteen pounds unto her the said Margaret . . . within four years."

Then the will proceeds to "will and devise unto my son John and his heirs and assigns . . . my coppyholds and customary lands" etc. "in Sabridgeworth." Any failure to pay Elizabeth and Margaret will result in the surrender of the property.

"Item. I give and bequeath unto George, Daniel and Joseph" certain lands . . . by estimation fifteen acres "from and after the decease of Agnes my said wife" . . . provided always . . . the said George, Daniel and Joseph shall within two years next after they shall be possessed of the said lands . . . pay or cause to be paid unto Isaac my son . . . the sum of twenty pounds lawful English money. I give and bequeath unto him in augumentation of his legacy as a fatherly gift.

And it is also my will and intent and meaning that the said George Daniel and Joseph do also pay or cause to be paid unto William my sonne or his assigns if he shall then be living the sum of ten pounds like lawful English money within three years next after they shall be possessed of the said lands hereby bequeathed unto them.

And if the said George Daniel and Joseph or either of them fail in payment of either of the said sums of money bequeathed unto the said Isaac and William at the days of payment aforesaid then my will is that the said Isaac or William or either of them to whom the failing of pay . . . shall be either in part or in all of the said money bequeathed shall . . . have possess all and several the said lands bequeathed to the said George Daniel and Joseph until the said money and every part thereof be fully paid out and satisfied unto him to whom it is or shall be awarded out of the benefits of the said lands.

Item. I will . . . to daughter Elizabeth . . . land commonly called Pedford . . . eleven acres upon condition . . . that Elizabeth shall pay . . . my daughter Margaret . . . twentyfour pounds . . . within one year . . . and that said Elizabeth shall pay . . . my daughter Mary forty pounds . . . if Elizabeth fails paying either Margaret or Mary at the times hereby limited . . . then . . . Pedford shall "remain unto my said two daughters Margaret and Mary" provided Margaret and Mary pay Elizabeth thirty pounds "within one year after such default."

Appendix 6

John Gace of Stortford, Herts, tanner, dated his will 24 Aug. 1602, proved 20 Sept. 1602. He left £15 to be paid to the poor of Stortford after his decease by the following inhabitants of the said town, viz. James Morley, gentleman, Thomas Perye, gentleman, John Miller, the elder, and "Maister" Thomas Miller (P. C. C. Montague, 61).

This will makes reference to Nathaniel Gary, father of Arthur Gary, bap. 1599, "son of Nathaniel Garie" of Roxbury, Mass., 1635; also to William Denison who emigrated to Roxbury 1631, and George Abbott, an ancestor of the Abbotts of Andover, Mass.

John Gace, the author of this will, married Agnes Denison, the widow of John Denison, who died in 1582; she was the daughter of John and Joan Willie of Thorley, Herts., bap. about 1544 (The Record, Jan., 1936); died in Roxbury as "Old Mother Denison" in 1641 (Ellis, *Hist. Rox.*)

John Gace was the step-father to all of Agnes' children. He gave to Agnes, his wife, the house "wherein I dwell" and a messuage recently bought; also 100 marks . . . her apparel and silver spoons.

To George Denison (age 20) £40. To Edward Denison (age 27), bro. of George, £10. To William Denison (age 31) 40s. To Elizabeth (Denison)

Crouch £5. To Richard Paine of Stortford 20 tanned hides. To Elizabeth Wheelwright, my sister-in-law, £10.

Executor: "My brother Miles Gace of Hempsted, Herts." James Morley and Thomas Perry overseers and witnesses. Edward Well and George Abbott wits.

Appendix 7

Will of John[4] Miller (son of John[3]) of Stortford, butcher, dated 9 Apr. 1640.

I bequeath to my younger son William my house in North Street in Stortford now in the tenure of Ralph Curtis and my barn at North Gate and the orchard there and Linsell Meade or the Hop ground Mead and four acres of arable land in Linsell field after my wife's death. To my said son 40 acres of ground called the Marshes bought of Nathaniel Carter, but if my son John bring up and maintain William until he goes apprentice then John to have the same. To my daughters Margaret, Sarah and Anne Miller 20s each at their ages of 21. To my sisters Handbury and *Chandler* 20s each. To the poor of Stortford 40s. Residuary legatee and executrix: my wife Martha. Witnesses: Tho. Newcomen, Thomas Meade, John Phillippes.

Proved at Stortford 6 June 1640 by the executrix. (Ibid. 241.)

Appendix 8

Will of Thomas[4] Miller of Royden (adjacent to Nazing) county of Essex, Yeoman, dated 19 May 1640.

I bequeath to my wife Hester (Cramphorne) £5 a year to be paid by my mother Agnes Miller of Stortford, county of Herts, widow, out of lands Agnes has in lease of me; to said Hester £10 a year out of a messuage in Stortford called Dane at Coynes being a jointure made by Thomas Miller, the elder, 1 February, 2 Charles I [1626/7] to the said Hester, feoffees, Daniel Cramphorne* and Robert Coult (Colt); also a close called Hawkes Croft next Dane at Coynes abutting on Galloway Street.

To my son Thomas (bp. 1633) the reversion of Dane at Coynes (Dane O'Coys) and the other lands after my mother's death. To my daughters Mary and Agnes 10s each. To the poor of Royden 5s. Residuary legatee and executrix: my wife Hester. Witnesses: John Goudge, Timothie Phissicke.

Proved 1 July 1640 by the executrix. (Archdeaconry Middlesex, Essex and Herts—Brown 110.)

Appendix 9

Will of John[5] Miller of Stortford, butcher, dated 7 July 1645.

My debts to be paid and if not enough money then my closes called Redcrofts and my two acres of arable land in Half Acres and executrix to put in bond to my cousin Edward Hawkins to pay the overplus to my daughters Mary and Sarah Miller at their ages of 21 and I give to my said daughters my land in Weightfield and Waytmead and Waytcrosse and Apden Field.

My father by his will dated 9 April 1640 devised to my brother William land called the Marshes bought of Nathaniel Carter, on condition I brought up and maintained my said brother which I have done, now I desire my executrix to pay him £60 for the said land and I give then 10 acres to my daughters Mary and Sarah and the rest to my son John Miller at the age of 21.

Residuary legatee and executrix: my wife Mary.

---

* Daniel Cramphorne, son of Thomas and Mary (Lyndesell) Cramphorne, bp. 24 Apr., 1585, married Mary Burnap 14 Sept., 1610, a sister of Robert Burnap who married Agnes Miller about 1624/5. Hester Cramphorne, sister of Daniel, bp. 30 Jan., 1597, married Thomas Miller ("eldest son") of the late Mr. Thomas Miller, M.A., of Stortford. Agnes (Miller) Burnap was living in Gt. Amwell in 1632—2 miles from Royden.

Overseers: my father-in-law Thomas Ashbye of Albury and my cousin Edward Hawkins of Stortford.

Witnesses: Tho: Newcomen, Thomas Ashbye, John Sumpner.

Proved 20 September 1645 by the executrix (Ibid. No. 8)

Appendix 10

Will of Martha Miller of Stortford, widow, dated 13 January 1665/6.

I bequeath to Thomas Carter of Debden, county of Essex clerk my son-in-law £5 and to Ann his wife £5. To my son-in-law Richard Meade, citizen of London, £5 and to Margaret his wife my daughter £5. To my son-in-law John Ashby of Stortford, draper, £5. and to Sarah his wife my daughter £5. To my grandchild John Miller son of my late son William £30, at his age of 21. To the four children of the said Thomas Carter, Thomas, Martin and William and Elizabeth 40s. To my grandchild Richard Meade son of Richard £5, and to his other two children 40s each and to my grandchild Margaret a pair of sheets. To John, Thomas, Sarah and Mary children of John Ashby 40s. each and to Edward Ashby his son £5 and to Sarah aforesaid a sheet. To my daughter Ann two pewter dishes. To my daughter-in-law Mary Miller 20s. and to her daughter Sarah 20s. To my daughter-in-law Mary Miller wife of my late son William 20s.

Executors: My sons-in-law Thomas Carter and John Ashby. Witnesses: Martha Fitch, Matthew Gerney Scr. Proved 13 July 1667.

Appendix 11

Lay Subsidies, County of Herts, 1563–1635, Stortford:

1 May	1563	William Myller, in goods	£9 –15s.
		John Myller	£8 –13s. 4d.
20 Feb.	1566/7	William Myller, in goods	£7 – 7s.
		John Myller	£8 – 8s.
18 Oct.	1571	John Myller, in goods	£8 –13s. 4d.
		William Myller	20s.– 2s. 8d.
	1607	John Miller	£4 – 5s. 4d.
		Thomas Miller	60s.– 4s.
		John Myller	40s. 2s. 8d.
27 Mar.	1626	Thomas Miller, lands	£3 12s.
		John Miller, lands	40s. 8s.
		Elizabeth Miller, widow	20s. 4s.
9 Dec.	1628	John Miller, in lands	40s. 8s.
		Agnes Miller, widow, in lands	20s. 4s.
		Elizabeth Miller, widow, in lands	20s. 4s.

Appendix 12

Bishop's Stortford, Herts, 1581–1682

Marriages

1581	George Hawkyn & Mary Meller m. 22 July
1582	John Meller & Ellen Sprannge m. 25 April
1584	John Gase & Agnes Denyson, wydowe, m. 1 May
1584	John Harvy & Luce Meller m. 2 Aug.
1585	"Long" John Meller & Mary Pylston m. 21 Nov.
1594	John Hille & Ellen Myller m. 24 Nov.
1615	John Chandler & Jane Miller m. 18 Sept.
1620	Willyam Miller & Ellener Alliat (Elliot) m. 25 Apr.
1622	John Miller sen^{r} & Agnes Chandler, widow, m. 8 July
1635	William Miller & Ann Ward m. 1 May

1641 John Miller & Ann Brett m. 7 Oct.
1648/9 John Miller & Elizabeth Prior m. 8 Feb.
1672 Thomas Scott & Sarah Miller of Little (Hadham) m. 30 Sept.
1673 Thomas Miller & Jane Browne m. 14 Oct.
1677 Richard Graves of Much Haddam & Mary Miller m. 17 Apr.
1680 William Miller & Sarah Jennings, both of Great Hadham, m. 29 Sept.
1682 Samuel Miller & Anne Browne, both of Sabridgeworth, m. 3 Oct.

Bishop's Stortford, Herts, 1561–1652

Baptisms

1561/2 Mary Meller dau. of John Meller, bp. 11 Feb.
1562 Susanna Meller dau. of Will'm Meller, bp. 8 Nov.
1563 Susanna Meller, bp. 25 Oct.
1570 Elizabeth Meller, bp. 30 July
1583 John Meller son of John, bp.—Dec. (after 17)
1585 Will'm Meller son of John, bp. 28 Nov.
1586* Johanne Myller dau. of John Myller Junr, bp. 11 Sept.
1587/8 Johanne Myller dau. of John Myller, the elder, bp. 21 Jan.
1588/9* Grace Myller dau. of John Myller, bp. 2 Feb.
1589/90 Margaret Miller son (dau.) of John Myller, bp. 22 Feb.
1590/91* John Myller son of John Myller Junr, bp. 7 Mar.
1591/2 Jane Myller, dau. of John Myller the elder, bp. 26 Feb.
1592* Will'm Myller son of John Myller Junr., bp 21 May
1593 Richard Meller son of John Meller the elder, bp. 15 July
1593/4 Elizabeth Myller dau of Thomas Myller, bp. 3 Mar.
1594* Anne Myller dau. of John Myller, bp. 25 Aug.
1595 Thomas Myller son of Thomas Myller, bp. 18 May
1596* John Myller son of John Miller Junr., bp. 19 Apr.
1596 Sarah Myller dau. of John Myller bp. 17 Oct.
1596 Joan Myller dau. of Thomas Myller, bp. 5 Dec.
1597 John Myller son of John Myller Junr., bp. 10 July
1598 John Myller son of Thomas Myller, bp. 2 May
1598 Anne Myller dau. of John Myller, bp. 1 Oct.
1598 Margaret Myller dau. of John Miller Junr., bp. 22 Oct.
1599/1600 Thomas son of John Miller bp. 4 Feb.
1600 Agnes dau. of Thomas Miller, bp. 3 May
1600/01 Ursula dau. of John Miller, bp. 1 Feb.
1601 Edward son of Tho. Miller, bp. 25 Oct.
1601/2 Elizabeth dau. of John Miller, bp. 20 Mar.
1503 Margaret son (sic) (daug.) of Thomas Miller bp. 2 Oct.
1603 Mary Myller dau of John, the elder, bp. 5 Dec.
1605 William son of Thomas Miller, bp. 7 Apr.
1606 Leonard son of John Miller bp. 22 July
1607/8 Mr. William Bendish, vicar of Bishopp Stortford, 1612
1608/9 Isaac son of Mr. Thomas Miller bp. 8 Jan.
1609 Thomas son of John Miller bp. 7 Nov.
1609/10 Mary dau. of Mr. Thomas Miller, bp. 18 Feb.
1612 George son of Mr. Thomas Miller bp. 10 May
1614 Danyel son of Thomas Miller, bp. 25 March
1616 Joseph Miller son of Thomas & Agnes, bp. 30 Dec.
1618 John Burnap son of Thomas and Mary bp. 1 Nov.
1618 Margaret Miller dau. of John & Martha, bp. 13 Dec.
1620 John Miller son of John & Martha, bp. 21 May

---

* Children of "Long John" Miller and wife Mary (Pylston).

1621 Judith Burnap dau. of Thomas & Mary, bp. 1 June
1622 Sarah Miller dau. John and Martha bp. 26 May
1623 Mary Miller dau. Willm & Helen bp. 26 Oct.
1623/4 Anne Miller dau. John & Martha bp. 1 Jan.
1625 Willyam Miller son Willyam & Helen bp. 27 Dec.
1625 John Miller, Jr., church warden
1627 Willyam Miller son John & Martha, bp. 11 June
1628 James Miller son of William bp. 6 Oct.
1630 Anne Miller dau. of Thomas & Hester bp. 9 Oct.
1630/31 Richard Miller son Willm & Helen bp. 1 Mar.
1633 Thomas Miller son of Thomas & (Hester) bp. 28 Apr.
1633 Margaret Miller dau. of William & ——— bp. 23 July
1636 Ann Miller dau. of William & Ellen bp. 14 Apr.
1639/40 John Miller son of George & ——— bp. 22 Mar.
1640 Mary Miller dau. of John & Mary bp. 21 Dec.
1641 John Miller son of George & ——— bp. 8 Aug.
1642 Martha Miller dau. of John & ——— bp. 29 Mar.
1643 Sarah Miller dau. of John & Mary, bp. 2 May
1644 Ann Miller dau. of George & ——— bp. 25 Aug.
1644 John Miller son of John & Mary bp. 13 Oct.
1649 John Miller son of John & Elizabeth bp. 11 Nov.
1651 Mary Miller dau. of John Miller bp. 9 Oct.

Burials 1561–1679

1584 John Meller bur. 4 July
1585 Luce Meller bur. 10 Sept.
1590 Johanne Myller, wydow, bur. 3 Nov.
1590/91 John Myller son of John Myller the younger, bur. 19 Mar.
1592 Willm Myller bur. 12 Apr.
1592 Ellen Myller bur. 11 June
1594 Mary Meller bur. 13 July
1600 Thomas Miller bur. 10 June
1610 William son of John Miller bur. 8 Oct.
1612 John Miller bur. 18 Sept.
1614 Thomas son of John Miller bur. 23 Apr.
1621 Mary wife of long John Miller, bur. 6 Apr.
1624 Mary Miller, (dau.) of William & Helen bur. 3 Nov.
1624 John Miller Junr. church warden
1625 Bridgett Abbott widow & ancient bur. 13 Aug.
1627 Thomas Miller, Mr. of Arts, bur. 23 May
1629 Joan Miller bur. Sept. 25
1630 Agnes Miller wife of (Long John) John the elder bur. 6 Dec.
1633 John Miller Senr. bur. 11 Oct.
1633/4 ——— Miller son of William bur. 4 Jan.
1640 John Miller son of George bur. 27 Mar.
1640 John Miller, the elder, bur. 17 Apr.
1642 Martha Miller bur. 13 Nov.
1643 Joane Miller bur. 9 Apr.
1643 The widow (Agnes) of Mr. Thomas Miller bur. 8 Aug.
1645 John Miller bur. 19 July
1645 Mary Miller dau. of John bur. 10 Oct.
1650/1 John Miller, the elder, bur. 12 Jan.
1656 The wife of William Miller bur. 23 June
1660 William Miller son of William Miller bur. 25 Apr.
1663 William Miller churchwarden.
1665 Elizabeth wife of George Miller of London bur. 29 Aug.

1665 Mary Miller dau. of William bur. 3 Oct.
1665 William Miller bur. 5 Oct.
1665 Elizabeth dau. of William Miller bur. 12 Oct.
1666 James Miller son of John, bur. 28 July. Plague.
1666 Renborough Miller dau. of John, bur. 1 Aug. Plague.
1666 Thomas Miller son of John, bur. 12 Sept. Plague.
1666 John Miller bur. 12 Oct.
1667 Widow Miller, the elder, bur. 1 Apr.
1670 Mary Miller bur. 20 June
1670 John Miller son of John bur. 20 Aug.
1678 Jane (Browne) Miller wife of Thomas, bur. 10 Sept.

Appendix 13

Feet of Fines, Herts. Easter 38 Elizabeth (1596).

(Abstract) Final agreement made in the Queen's Court at "Westminister," from Easter Day in one month, 38 Elizabeth, before the Queen's Justices there, between John Gace & Thomas Myller plaintiffs & George Abbott & Bridget, his wife, Edward Hake, gent, & Margaret, his wife, deforceants of 2 messuages, 1 barn, 2 gardens, one orchard & 5 acres of land in Bishop's Stortford als Stortford, whereof a plea of covenant was summoned between them, that is, that the said George, Bridget & Edward & Margaret have acknowledged the same to be the right of John, as of their gift & that they have remised & quitclaimed for themselves & their heirs to the said John & Thomas & the heirs of John, for ever. And further for themselves & the heirs of George & Edward have granted to warrant John & Thomas & the heirs of John in the same against themselves & the heirs of George & Edward for ever. For which grant, acknowledgement, &c., John & Thomas have given them £80 sterling.

Herts.

John Miller, gentleman, and John Thurgood estate in Bishop's Stortford worth £10 per year 1599. (Hertford Sessions Rolls, 1581 to 1650.) John Miller, church warden, St. Michaels Church 1570–1571.

Feet of Fines, Herts.
Easter, 10 Charles I. 1635.

Final agreement made in the King's Court at Westminster, from Easter Day in 15 days, 10 Charles I, before the King's justices there, between Arthur Capell, Esq., plaintiff & Thomas[4] Miller & Hester his wife, Daniel Cramphorne & Agnes Miller, widow, deforciants of 28 acres of land, 4 acres of pasture & 2 acres of wood in Stortford, whereof a plea of covenant was summoned between them in the same court, to wit, that Thomas, Hester, Daniel & Agnes have acknowledged the said premises to be the right of the same Arthur, as of their gift & that they for themselves & their heirs have remised & quitclaimed to Arthur & his heirs for ever And further Thomas & Hester, for themselves & the heirs of Thomas have granted to warrant Arthur & his heirs in the same against themselves & the heirs of Thomas for ever And Daniel likewise against himself & his heirs & Agnes likewise against herself & her heirs. For which grant, warranty, &c. Arthur has given them £41 sterling.

Feet of Fines, Herts.
Easter, 1656.

Final agreement made in the Court of Common Bench, Westminster, from Easter Day in one month (1656) between *John Coller*, plaintiff & Thomas[5] Miller & Susan his wife, deforciants, of a messuage, one curtilage, one malting house, 3 barns, one stable, 3 yards, 2 gardens, 27 acres of land, with the ap-

purtenances, in Stortford, whereupon a plea of covenant was summoned between them, that is that Thomas & Susan have acknowledged the premises to be the right of John, as of their gift & those which they remised & quitclaimed to him & his heirs for ever And moreover for themselves & the heirs of Thomas have granted to warrant John & his heirs in the premises against themselves & the heirs of Thomas for ever. For which acknowledgement, grant, &c., John has given them *£60.*

Feet of Fines, Herts.

Michaelmas, 29 Charles II (1677).

Final agreement made in the King's Court of Westminster, from St. Martin's Day in 15 days, 29 Charles II, Between John Wingfield & Robert Stotesbury, plaintiffs & Charles Veere & Mary his wife & John Miller & Elizabeth his wife, deforciants, of 2 messuages, 2 gardens, 2 orchards, 57 acres of land, 7 acres of meadow, 5 acres of pasture in Sawbridgeworth, whereof a plea of covenant was summoned between them, that is, that *Charles, Mary, John Miller* & Elizabeth have acknowledged the premises to be the right of John Wingfield as of their gift & those they have remitted & quitclaimed to said John Wingfield & Robert & the heirs of John Wingfield for ever And further for themselves & the heirs of Mary & Elizabeth have granted to warrant John Wingfield & Robert & the heirs of John Wingfield in the same against themselves & the heirs of Mary & Elizabeth for ever. For which grant, &c., John Wingfield & Robert have given them £100 sterling.

(John Miller brother of Joseph Miller had a daughter Mary who married Mr. Charles Veere), thus Charles is a nephew by marriage of Joseph Miller.

Appendix 14

Court of Sessions Hertsfordshire

5–13, 20 May 1617. Elizabeth Miller* of Stortford, widow, for ploughing up within the six years last past a common cartway leading from Gallows Street or Galloway Street to the end of the Town of Stortford called "Northgate End" on East side of the land which she holds in the common field called Great Halfeacres and for making ditches and banks at the end of said cartway so that the public with their horses and wagons cannot pass.

5–227. Petition 9 Jan. 1636/7 of Dame Margaret Denny, Thomas Arthur, George Hawkins, John Miller and other inhabitants of Stortford relating to the parish rates in Stortford.

Appendix 15

From Hadham Hall Manor Rolls

1580 John Miller being present at Hadham Court.
1589 John Miller is deceased holding one acre in the Manor.
"John Miller his son and heir admitted fine 2s. 6d."
"He surrendered to his brother Thomas Miller who did not appear."
1590 Thomas Miller admitted to one acre in Stortford abutting Plantynes on west, on Thomas Miller's land south, west on John Gibbs land, north under a surrender 26 May 1589, 12d. rent 3s. 4d.
1592 Thomas Miller invited and excused.
1596 Thomas Miller invited and excused.
1600 July 26 Thomas Miller invited and present at Court.
1602 Thomas Miller invited and excused.
1604 Thomas Miller invited and excused.
1605 Thomas Miller invited and present.
1606 Thomas Miller, Gent, invited and present, 1606–1627.

* Probably Elizabeth (Meade) Miller, widow of John Miller who died 1611/2.

1628 Thomas Miller, Gent, is deceased holding one acre copy hold in Stortford abutting on Plantynes. Thomas Miller his son of full age admitted 12s.

April 1631 "Joane Marshall is deceased and Thomas Miller . . . is her brother and heir."

ADDENDUM

Margaret (Miller) Waterman (1603–1682/3), sister of Joseph Miller of Newton, Mass., married Thomas Waterman of Roxbury about 1650 as the widow of John Stonard. She married Stonard May 12, 1631, in St. Dunstan's-in-the-West, London (par. reg.). They arrived in Roxbury before 1645; purchased house and land (8 acres) from Richard Pepper for £50. (John Stonard inventory, Aug. 20, 1649.) Mortgaged house and land to Governor Thomas Dudley, 1645; mortgage discharged, Jan., 1646 (Suffolk County Liber 1, Folio 62). Probably had children. Inventory contains this: "Itm 1 trundle bedd." John Stonard died Aug. 13, 1649, "a midle aged man or little more." Joseph Stonard of Hadham, 1662, was probably a son of John and Margaret Stonard.

(See footnote page 8.)

In 1669 Joseph Stonard applied for freemanship

In 1681 Joseph Stonhard was relieved of county tax because of great loss by sickness—1726 called "Mr." Joseph Stannerd

(Public Records of the Colony of Conn., Vol. 2 and Vol. 3, Vol. 6.

SUPPLEMENT

THE SONS OF SAMUEL FISHER MILLER AND CHARLOTTE HOWE MILLER

SUPPLEMENT

THE SEVENTH GENERATION

THE SONS OF SAMUEL FISHER MILLER AND CHARLOTTE HOWE MILLER

(Compiled in the Fall of 1940)

107. *Walter[7] Howe Miller, son of Samuel Fisher[6] Miller, b. Mar. 15, 1857, in Cleaverville (now in Chicago), Illinois; d. Mar. 3, 1929, in Chicago. Educated in the schools of Amherst, Mass., Blue Island and Chicago, Ill. After leaving school he became a clerk in Bliss Barnes and Company, printers and stationers, 1873–1876. Married October 16, 1879, in Chicago, Rowena Paul Fobes, dau. of Edwin Aretas and Frances (Quincy) Fobes, b. Aug. 5, 1860, in Chicago. She died Feb. 24, 1939, in Los Angeles, California. Employed with Anglo-American Packing Provision Company, 1876–1882. Provision broker, 1882–1884. Formed the firm of Miller, Craig and Company. Founder and President Miller and Hart, packers, 1898–1919. Treasurer Pacific Flush-Tank Company. Member Knights Templar, Shriner, Chicago Athletic Club, Exmoor Country Club, Saddle and Sirloin Club.

Children:

i. Charlotte Rowena, b. Aug. 19, 1880. Married Mar. 4, 1898, to Arthur Roy McDougal, of Chicago, b. Oct. 19, 1880, and d. July 17, 1937.
   1. Rowena, b. July 23, 1899, m. Alfred R. Urion, Jr., b. April 5, 1891. M. Apr. 10, 1920, and had Patricia, b. Aug. 10, 1921, and Rowena, b. Feb. 21, 1926.
   2. Helen, b. in Chicago, June 19, 1901, m. Oct. 30, 1922, James H. McNamara, b. Feb. 24, 1895, and had James H., Jr., b. April 21, 1925; she died Mar. 10, 1934.
   3. Charlotte, b. in Chicago, May 4, 1903, m. Dec. 30, 1924, Melville E. Quincy, b. Feb. 24, 1897, and had Charlotte 3rd, b. Apr. 27, 1927, and Melville E., Jr., b. July 22, 1928.

ii. Walter Fobes, b. in Chicago, Ill., Apr. 3, 1882. Educated at Chicago Manual Arts School and Cornell University. Studied architecture at Beaux Arts, Paris. Architect: Designed model packing house Miller and Hart, and residential buildings in Evanston and Chicago. Served with distinction with Red Cross in Italy during World War. Unmarried. Died June 29, 1925, in Chicago.

---

[7] Walter Howe Miller was born (Mar. 15, 1857) in the house of his Aunt Bethia (Miller) Nichols and Uncle Rev. W. A. Nichols, Cleaverville—later Oakdale or Oakland, now in Chicago (south), 4008 Lake Park Ave., cor. of 39th St. The house was standing and occupied in 1933.

His father, the principal of Lake Forest Academy, Lake Forest, Ill., built a home there in 1860, where Walter Miller lived with his parents, brothers and sisters, until after the death of his mother on Nov. 25, 1863. Walter then was sent to live with one of his uncles until August in 1867, when his father married Miss Alma F. Emerson, after which the children were all called together and lived in the W. A. Nichols home in Lake Forest, Ill. A year or so later the whole family moved to Amherst, Mass., where Walter remained with the family until after the death of his father on Oct. 28, 1870, when he was sent to Clifton, Ill., to live with his Uncle Charles and Aunt Mary (Faxon) Howe. Walter later followed them to Washington Heights, Chicago, where he was tutored by his cousin, Edward G. Howe.

108. SPENCER[7] MILLER,* of South Orange, N. J., and Laguna Beach, Calif., b. April 25, 1859, in Waukegan, Ill. Educated in the schools of Lake Forest, Ill., Amherst, Mass., and at St. Marks (Military School), Rochester, N. Y. (2 years). Grad. Worcester Polytechnic Institute, 1879, B.S. Employed Link-Belt Company, Chicago, 1880–1888. Married on Jan. 1, 1885, in Worcester, Mass., Hattie M. Ruggles, dau. of Willard Gould and Mrs. Laurancia (Higgins) Jacob Ruggles, b. June 6, 1857, and d. Jan. 8, 1930, in South Orange, N. J. Chief Engineer, Lidgerwood Manufacturing Company, New York, 1888–1926. Inventor and designer of Lidgerwood cableways—notably the cableways used at Gatun Locks, Panama Canal, and Boulder Dam, Nevada; and Marine cableways for fueling warships at sea of five nations; also an elastic towing engine. Trustee Worcester Polytechnic Institute, Doctor of Engineering (Honorary) 1928, Member U. S. Naval Consulting Board 1915; Fellow American Society of Mechanical Engineers, Life Member American Society of Civil Engineers, Legion of Honor American Institute of Mining Engineers, Naval Architects and Marine Engineers, Member Essex County Mosquito Commission, sometime President Village Improvement Society, Past-President South Orange Field Club, Vestryman and Senior Warden Church of the Holy Communion (for 31 years), Member of Engineers' Club of New York and Cosmos Club of Washington; Member Sigma Xi (Honorary).

Children:

113. i. Marguerite Ruggles, b. Worcester, Mass., Dec. 10, 1888. Educated at Dearborn Morgan School, Orange, N. J., and Miss Capen's School, Northampton, Mass. Grad. Smith College, 1911. Studied painting in Rome, Italy, 1912–1913. Married in South Orange, June 19, 1915, Pierrepont Edwards Grannis, son of Charles Kelsey and Annie (Appleton) Grannis, of Utica, N. Y., b. Nov. 3, 1878. Teacher of Art at Rosemary Hall, Greenwich, Conn., 1936–1939. Member Smith College Club and Art Students' League.

Children:

1. Peter Edwards Grannis, b. in New York Feb. 9, 1919.
2. Harriet Ann Grannis, b. in New York Oct. 11, 1920.

114. ii. Spencer, Jr., b. Worcester, July 2, 1891. Educated Columbia High School, South Orange, N. J., and Bordentown Military Institute, Bordentown, N. J. Grad. Amherst College, 1912, B.A.; Columbia University Law School, 1912–1913; Columbia University School of Political Science, 1913–1915, Columbia University, M.A., 1914; George William Curtis Fellow in Public Law, 1914–1915, Division of Investigation, U. S. Commission of Industrial Relations, 1915; Assistant to Warden Sing Sing Prison, 1915–1916; Engineering School, Columbia University, 1916–1917; Industrial Division U. S. Navy Department, N. Y. Navy Yard, 1917–1919; Instructor in Government, Columbia University, 1919–1921; Director Workers Education Bureau of America, 1921–. Special study Adult Education in Great Britain, 1921. Consultant on Industrial Relations National Council Protestant Episcopal Church 1928–. Married on Oct. 27, 1928, in Nutley, N. J., to Margaret Montague Geer, b.

---

* Dr. Spencer Miller married as his 2nd wife in Bishop's Stortford, County Herts, England, June 25, 1931, LOLA MACDONALD SLEETH, dau. of Sterling Lynn and Electra (Summerlin) MacDonald, of Choteau, Mont. She was born Oct. 24, 1863 and m. (1st) Francis Sleeth, who died in 1901 in New York. She was Director of Fine Arts for thirty years at the National Cathedral Schools for Girls in Washington, D. C. Student of Whistler in Paris, painter and sculptor. Her marble bust of Martha Washington now in Continental Hall, Washington, and a replica at Valley Forge. This portrait appears on the 1½ cent United States postage stamp. Also bust of Bishop Henry Y. Satterlee and Brig. Gen. John M. Wilson, both in Washington, D. C.

May 23, 1896, in Nutley, N. J., dau. of Alpheus and Florence (Smith) Geer. Acting Director National Council for Parent Education, 1930–1931. Round Table leader, Institute of Public Affairs, University of Virginia, 1928–1941; Special Survey Church and Industry in Great Britain, 1928; External Collaborator International Labor Office, Geneva, 1935; Lecturer, Fordham School of Social Service, 1933–1935; Technical Adviser American delegation International Labor Conference; Associate Director American Youth Commission for European Survey, 1937; lecturer in colleges and summer schools, United States and foreign countries, 1921–1940; LL.D. Kenyon College, 1938; Distinguished Public Service Medal Rutgers University, 1939; Fellow National Institute of Social Sciences, 1940; Lecturer, School of Commerce, New York University, 1941–1942; Member Academy of Political Science, American Association for Adult Education, Boys Brotherhood Republic of New York, Christodora House; League of Nations Association; Senior Warden, Church of the Holy Communion; President Village of South Orange, N. J., Trustee Hobart and William Smith Colleges, Trustee Town Hall, Inc., New York; Sociologist; Consultant; Member Alpha Delta Phi, Pi Gamma Mu (Honorary) Amherst Club of New York; City Club of New York; Author (with J. L. Fletcher) of "The Church and Industry," and other works.

Children:

1. Ann Montague, b. Oct. 12, 1930, Orange, N. J.
2. Spencer 3rd, b. Dec. 14, 1932, Orange, N. J.
3. Sidney Geer, b. Oct. 1, 1935, Orange, N. J.

115. iii. Helen Emerson, b. in South Orange, Jan. 25, 1897. Educated at Miss Baird's School, Orange, N. J., and Miss Capen's School, Northampton, Mass. Studied music Rome, Italy 1912–1913, also Teachers' College, Columbia University. Married on Jan. 1, 1921, in South Orange, N. J., to Aurelio Giorni, pianist and composer, b. Perugia, Italy, Sept. 15, 1895, son of Carlo and Linda (Bergner) Giorni, of Rome, Italy, and great-grandson of Bertel Thorwaldsen, the great sculptor of Copenhagen, Denmark (1770–1844). He died Sept. 23, 1938.

Children:

1. Elena Linda Giorni, b. Dec. 18, 1921.
2. Yolanda Elena Giorni, b. June 4, 1924.
3. Aurelia Maria Giorni, b. Jan. 2, 1927.

109. SAMUEL FISHER MILLER, JR., b. in Lake Forest, Ill., Sept. 19, 1861; d. Sept. 2, 1939, in Bay Head, N. J. Married in Boston, Mass., May 4, 1886, to Marion E. Sleeper. He was educated at Devoe Military College, Niagara Falls, N. Y.; Amherst College (1 year), Amherst, Mass., and graduated from School of Mechanics Arts, Massachusetts Institute of Technology, Boston, Mass., in 1883. President of Miller-Collins, builders of steel bridges and other steel structures, 1902 to 1906. President of the Pacific Flush-Tank Company of Chicago and New York, 1910–1932 (as successor to his brother Sidney who died in 1910). After retiring from business he devoted most of his time to the Boy Scouts. From 1934 to 1938 he was Boy Scout Commissioner for the Oranges and Maplewood, N. J., Districts; his services receiving recognition in the award of the Silver Beaver, highest honor obtainable by a layman. From 1900 to 1910 he was tenor in the quartette in the choir of the Fifth Avenue Baptist Church; choir Church of the Holy Communion (1910–1916) South Orange, N. J. Member Mendelssohn Glee Club of New York; one of the founders and a life member of the Orange (N. J.) Glee Club; Vice-Commodore of the Bay Head Yacht Club and a life member of the Montoloking Yacht Club,

N. J. Trustee Orange Orthopedic Hospital and Orange Valley Settlement. Member Delta Upsilon Fraternity.

Children:

i. Gladys Edwards, b. Sept. 22, 1885; d. Dec. 22, 1888, in Chicago, Ill.

ii. Philip Francis, b. Apr. 23, 1890, in Brooklyn, N. Y.; d. in 1933 in Maplewood, N. J. Educated in the public schools of South Orange, N. J. Grad. from Armour Institute of Technology, Chicago, Ill., 1911, with B.S. degree in Chemical Engineering. Designing engineer with Pacific Flush-Tank Company, New York, 1913–1917. Married September 13, 1916, Marion Weber, b. June 29, 1897. Served in the Ordnance Division of the U. S. Army, Sept. 1917–1919, with rank of Captain. Put in charge of engineering and design work in connection with the production of the 155-mm. Filloux gun. Sales manager of the Industrial Department De Laval Separator Company of New York, 1919–1933. Associate Member American Society Mechanical Engineers; Member Rock Spring Country Club; Delta Tau Delta Fraternity, Tau Beta Pi (Honorary).

Children:

1. Philip Francis, Jr. b. Oct. 29, 1916. Married Ann L. Hay Nov. 23, 1939.

2. Arthur Weber, b. Feb. 29, 1920.

117. iii. Donald Fisher, b. in South Orange, N. J., Apr. 8, 1894. Educated in public schools of South Orange; grad. Columbia High School, Lafayette College (1½ years). U. S. Naval Academy Reserve Officers' School, Annapolis, Md.; U. S. Submarine School, New London, Conn. Enlisted 1917, U. S. Navy and was assigned to submarine service with rank of Ensign, U. S. Navy, June 1, 1918. Commanding Officer, Scout Patrol Boats SP 33 and SP 411. Married May 6, 1922, Helene M. Tuttle; b. Aug. 3, 1897. Vice-President Turbine Equipment Company, New York, 1925–. Member American Society Naval Architects and Marine Engineers; Governor Orange Lawn Tennis Club; Member Downtown Athletic Club, Delta Kappa Epsilon.

Child:

Donald Fisher, Jr., b. May 20, 1925, South Orange, N. J.

110. SIDNEY WALKER MILLER, b. in Lake Forest, Ill., January 23, 1863, d. in Chicago in 1910. Educated at schools in Amherst, Mass., Westchester, Vt., Episcopal Institute, Burlington, Vt., and Harvard University. Married on July 11, 1883, to Ida Ketz in Chicago, Ill. No issue. Assayer and manager gold mine, Pino, Mexico, 1885; Assistant City Engineer, Pasadena, Cal., 1886. Inventor of Miller Syphon which was awarded bronze medal at World's Fair in Chicago, 1893. Founder and President of Pacific Flush-Tank Company, 1894–1910. World traveller. Member Knights Templar.

A BRIEF BIOGRAPHICAL SKETCH
OF
SIDNEY WALKER MILLER

A BRIEF BIOGRAPHICAL SKETCH OF SIDNEY WALKER MILLER

By Spencer Miller

The life of Sidney Walker Miller, who died at the untimely age of forty-seven, was full of restless adventure alternating with desperate illnesses and sorrows. He was born in Lake Forest, Ill., on the banks of Lake Michigan, January 23, 1863. Two months prior to his birth his mother's favorite cousin, Sidney Walker Howe, U. S. A.,* was killed on the field of battle. It made a deep impression on her. The new-born was sympathetically named after him.

Ten months later Sidney's mother died, on Nov. 25, 1863. The family was thereupon broken up and the four brothers and one sister were separated for nearly four years.

In 1867 his father married Miss Alma F. Emerson of Amherst, Massachusetts, and the whole family was brought together in Lake Forest for one year. The following year the family moved to Amherst where his father was to become Professor of Mathematics and Civil Engineering at the Massachusetts Agricultural College. When Sidney was about ten years of age he was stricken with paralysis. Both legs were folded back and became immovable; one foot was completely reversed. His only posture was to lie face downward. During his illness he lost so much flesh that he seemed like a living skeleton. He was sent to Dr. Rhodes' Sanitarium at Pelham Springs near Amherst where he was treated by a process largely electrical from batteries with the use of gold. The cure was complete. Sidney's restoration to health was said to be miraculous, and when he was able to walk without crutches his recovery was recorded in the Boston newspapers.

When fully restored to health and strength, Sidney was sent to a private school in Westchester, N. Y., managed by Mr. Brainard Harrington. Being a new student he was "initiated" by being raised high in the air and lowered by a rope—a boyish prank imitating lynching. This experience resulted in a case of St. Vitus dance.

After a slow recovery he was sent to the Vermont Episcopal Institute, a military school in Burlington, Vt., where he was fitted to enter the freshman class of Harvard College. He was a brilliant student in college, especially in literature. After leaving Harvard he went to Chicago where his brother Walter, who was already a recognized business leader, aided him in securing employment.

On July 11, 1883, he was married, and two years later he and his wife left for Mexico where he became an assayer and manager of a gold mine in Plon, Mexico, which belonged to his brother-in-law. The following year (1886) he arrived in Pasadena, Calif., and became an assistant to the city engineer. It was here that he invented the Miller Syphon for flushing sewers which has been adopted all over the United States and in the British Colonies. Sidney was stricken again in California with inflammatory rheumatism and a com-

* Lieut. Sidney Walker Howe, U.S.A., was the son of George Howe, Esq., of Boston and in May, 1862, the Boston *Transcript* said: "Young Howe was in Europe when the war commenced and immediately returned home to fight for his country. He fell doing his duty gallantly at Williamsburg. . . . He never flinched and throughout the engagement he kept cheering his men until he fell. . . . He fairly and honorably earned the title of hero." George Howe, his father, gave to Amherst College the chime of bells in the College Chapel as a memorial to his son, Lieut. Sidney Walker Howe, and other Amherst men who died in service.

plication of other diseases which made him a bed-ridden invalid for more than a year.

In 1893, after recovering from his illness, he went to the Chicago's World Fair and exhibited his patented "Miller Syphon." He received the bronze medal for the most perfect device of its kind. Later he organized the Pacific Flush-Tank Company with his brother, Walter H. Miller, as sole partner and treasurer. When this business was well established, Sidney became a world traveler, going south as far as Cape Horn, South America, and east into Egypt and India, China and Japan.

Sidney died on November 14, 1910, in Chicago. His death was unexpected though he seemed to have lost interest in life shortly before his passing. One of his greatest sorrows was that his wife did not bear him any children. Sidney was a lovable character. All his nephews and nieces adored him and, although he was the youngest brother, he had the best classical education. As an inventor he held a total of thirteen patents, the first was dated 1891, and all were related to an automatic flushing syphon and other sanitary sewage disposal apparatus.

INDEX OF NAMES

INDEX OF NAMES

Miller, Meller, Myller, Millior, Millar

Abigail 23
Agnes ix, x*, 5*, 6*, 7*, 10*, 11, 12, 13*, 14, 15*, 16*, 19, 23*, 38, 39*, 40*, 41, 42*, 43, 44
Agnes or Anne xi, 7, 10, 11, 15, 17
Agnes or Ann 10
Agnes (——) Chandler 3
Alice Maria 33
Alma Filia (Emerson) 33, 49, 55
Ann (Hawkshead) 8
Anne (Ward) 8, 13, 41
Ann 18, 26, 43*
Anna 26, 29
Annie 35
Anne x, 2, 4, 5, 6, 7, 9, 11, 15, 16, 17*, 19, 40, 42*, 43*
Arthur Weber 52

Barbara 7
Beulah (Wheeler) 29, 30
Benjamin 4*
Bethia 31
Bethia (Avery) 31, 32
Bethia Avery (Ware) 31
Betty 30
Bridget ix
Bridget (Jernegan) ix

Chandler 40
Charles 45
Charlotte (Howe) 33, 49
Charlotte Rowena 33, 49

Daniel 9, 13, 15, 39*
Danyel 42
David 29
Deborah x, 30
Dolly Flagg 30
Donald Fisher 33, 52*

Edward 8, 13
Elbert, H. T. ix
Eleanor 24*
Eleanor (——) Pope 24
Elinor 21
Ellen (Sprenger, Spraunge) 4
Ellener (Eliot Alliat) 4
Elizabeth xi, 1, 2, 3, 5, 6*, 7*, 8, 9*, 10*, 11, 12, 13*, 14*, 15, 16*, 17*, 18*, 19*, 23*, 25, 26*, 27*, 28*, 29*, 38, 39*, 41*, 42*, 43, 44, 45*
Elizabeth (Jardfield) ix
Elizabeth (Meade) ix, 4, 5, 38, 45
Elizabeth (Turner) 4
Eliz. 4
Eliza (Carter) 28
Ephriam 28, 29, 30
Esther 29
Experience (Fuller) 27
Eunice 29

George x, 8, 9*, 15, 39*, 42, 43*
Gladys Edwards 33, 52
Grace 2, 42

Handbury 40
Hanna 31
Hannah 25
Hannah (Billings) 32
Hannah (Train) 27
Helen 43
Helen Emerson (Giorni) 33, 51
Helene M. (Tuttle) 33, 52
Hebsibah (Bartlett) 31
Hattie M. (Ruggles) 33, 49
Henry W. 31, 32
Hester (Cramphorne) x, 6*, 10, 11, 13, 14, 15, 40*, 43, 44

Ida Blanch (Ketz) 33, 52
Isaac 8, 13, 15, 29, 39, 42
Isabel 3, 4

James 4, 25, 30, 43, 45
Jane 5, 13, 25, 38, 41, 42
Jane (Browne) 44
Johan (Thurgood) 1*
Joan (Thoroughgood) x
Joan (Marshall) 6
Joan 37, 38*, 39, 42
Johan 38
Johanna 2
Johanne 5, 42*, 43
John ix*, x*, xiii, xv, 1*, 2, 3, 4, 5, 6, 7, 9*, 12, 13, 14*, 29, 30, 31*, 37*, 38*, 39*, 40*, 41*, 42*, 43*, 44*, 45*
Joseph ix*, x*, xi*, xiii*, 4, 6, 8, 9*, 10*, 11*, 12*, 13*, 14*, 15*, 16*, 17*, 19*, 23*, 24*, 25*, 26, 27*, 28*, 29, 30, 31, 39*, 42, 45, 46
Josiah 31

Katherine 1, 2, 5, 37*, 38

Leonard 2, 42
Levi 30
Lola MacDonald (Sleeth) 33, 51
Lucy 1, 2, 37
Luce 41, 43
Lucy (Golding) 30
Lucy (Walker) 29
Lucy Maria 32
Lydia (Cutting) 29

Marguerite R. 33, 50
Margaret Montague (Geer) 33, 50
Marcy (Beven) 4
Margaret xi*, 2, 4*, 5, 6, 7, 8*, 11, 12, 13, 15, 16*, 17*, 18, 19, 38, 39*, 40, 41, 42*, 43, 46
Marion Weber 52

* Indicates more than one reference.

Martha 14, 29, 37, 42, 43*
Martin ix, x
Mary x, 1, 2, 4, 5, 6, 7, 8, 28*, 29, 30*, 32, 38, 39, 40, 41*, 42*, 43*, 44*, 45
Marye x
Mary (Ashby) 14
Mary (Eggleston) 4
Mary (Johnson) 4
Mary (Pope) xi, 18, 24, 25, 26
Mary (Pylston) 2, 42
Mary (Whiting) 28
Mary (Williams) 28
Marion E. (Sleeper) 33, 51
Mary Fisher 33
Mary (Andrews) 32
Mary (Flagg) 30
Mathias x
Mathia x
Molly 30
Moses 29, 30, 31*
Moses Alexander 32
Mehitabel 4

Nathan x
Nancy (Merrick) 32

Philip Francis 33, 52*
Priscilla x
Phoebe 26

Rachel (Buttolph) 30
Rebecca (Johnson) 4*
Rebecah 27
Renborough 38
Richard x, 4, 5, 8, 24, 42, 43
Rowena Paul (Fobes) 33, 49
Ruth Ann 32

Samuel x, 4, 26*, 27*, 28*, 29*, 30*, 31*, 42
Samuel Fisher 32, 33*, 49, 51
Sara 5
Sarah 4, 5, 14, 28, 29, 30, 31, 32, 38, 40*, 41, 42*, 43*
Sarah (Bennet) 29
Sarah (Gray) 30*
Sally (Gray) 31*
Sarah (Nettleton) 4
Sidney Walker 33, 52, 55, 56
Sidney Geer 51
Silas 30
Spencer x, xi*, xiii, 33*, 49, 50*, 51
Samuel Ware 32
Simon x
Stephen x
Susan 15, 44, 45
Susanna 1, 2, 7
Susannah 6, 42
Susan (Hicks) x, xiii
Susan (Thurgood) xi, 6, 15

Tho. 3, 42
Thos. 6
Thomas ix*, x*, xi*, 1, 2*, 3*, 4*, 5, 6*, 8, 9, 10*, 11, 12*, 13, 14*, 15*, 16, 23, 26*, 27*, 28, 30*, 31*, 37*, 38*, 39, 40*, 41*, 42*, 43*, 44*, 45*, 46*
Thomas Spencer 32
Timothy 28, 30

Ursula 5, 38, 42

Walter 33
Walter Howe 33, 49, 56
Walter Fobes 49
William x*, 1*, 2, 4, 5, 8, 13, 15, 30, 32, 37, 38*, 39, 40*, 40*, 41*, 42*, 43, 44
Willm. 43

INDEX OF NAMES

Other than Miller

ABBOT, ABBOTT, Bridget (Willie) ix
Bridget 43, 44
George ix, 12, 39, 40
Hannah (Chandler) 12

ALLIAT, (ELIOT) Ellener 41

ASHBY, ASHBYE, Edward 41
John 41
Mary 41
Sarah 41
Thomas 41

BENDISH, William 42
Thomas 11

BOWLES, Elizabeth 12
John 16, 18

BRETT, Ann 42

BROWNE, Anne 42
Jane 42

BULL, Thos. 23, 24

BULLARD, Ann 17, 18
Isaac 17

BURNAP, BURNOPE, BURNAPPE, Agnes 18
Agnes (Miller) 14, 16*, 17, 18, 19, 23, 27
Agnes or Ann (Miller) 6, 11
Ann 17, 18
Anne 7, 17
Edward 7, 16
Isaac xi, 6, 7, 17
Isaack 17
John 12, 42, 43
Judith 43
Mary 40, 42
Mary (Eliot) 12
Richard 7
Robert xi, 13, 16, 17, 40
Sarah 7, 18
Thomas xi, 7, 12, 13, 16, 42

BURNET, BURNETT, Ann (Miller) 18
Anne 17
Isaac 16
Isaack 17
Robert 18
Thomas 18

BUTTOLPH, Rachel 30

* Indicates more than one reference.

CAPELL, Arthur 18
CARTER, Ann 41
Elizabeth 41
Martin 41
Nathaniel 40
Thomas 41
William 41
CHILD, Elizabeth 27
Ephraim 27
Hannah (Train) 27
Richard 27
CRAMPHORNE, Agnes (Miller) 44
Anna 10
Daniel 10*, 11, 15, 40*, 44
Ester (Hester) 10
George 10
Hester 10, 11, 13, 14
James 10
John 10*
Joseph 8
Mary 10*, 11*, 13
Mary (Burnap) 10, 11, 34
Mary (Lyndesell) 10, 11, 40
Sarah 10
Thomas 10*, 40
William 11
CROUCH, Elizabeth (Denison) 39

DAMON, Phoebe (Miller) 29
Thomas 29
DANE, Agnes (Bayford) (Chandler) 12
Frances (Bower) 12
Francis 12
Dr. John 3, 12
Mary 3
DENISON, DENNISON, DENYSON
Agnes (Miller) ix
Agnes (Willie) ix*, 39*
Daniel 9, 12
Edward 9, 12, 39
Elizabeth 39
George 9, 12, 39
Joane (Momford) 3
John ix
Margaret (Chandler) 3, 12*, 13*
William xi, 12, 13, 39*
DICKINSON, Dea. Aaron 32
Cornelius E. 32
Cornelius Everett 32
Mary Esther 32
Samuel Fowler 32
DUDLEY, Thomas 46

EAGLESFIELD, Elizabeth (Miller) 7
Thomas 7
William 7
ELIOT, John 9, 13
Mary 12
Phillip 10
EMERSON, Alma Filia 33
Benjamin 12
Elizabeth 12
Elizabeth (Breuster) 12
James 12
Joseph 12
Ralph 12
Thomas 12
EVE, —— 14
Sarah (Miller) 14

FLAGG, Grace 30
Mary 30
Richard 30
FOBES, Rowena Paul 33
FULLER, Elizabeth 27
Experience 27
Joshua 27
Josiah 30
Mary 30

GACE, Agnes (Willie) Denison 39
John 39*, 41, 44
Miles 40
GARY, GARIE, Arthur 39
Nathaniel 39
GEER, Margaret Montague 33
GIORNI, Aurelia Maria 51
Aurelio 33
Elena Linda 51
Helen Emerson (Miller) 33
Yolanda Elena 51
GOLDING, Lucy 30, 31
GRANNIS, Harriet Ann 50
Marguerite R. (Miller) 33
Peter Edwards 50
Pierrepont Edward 33
GRAY, Prof. Asa 29
Moses 29
Moses Wiley 29, 30, 31
Robert 30, 31
Sally 31
Sarah 31
Sarah (Miller) 31
Sarah (Wiley) 30*

HAMMOND, Elizabeth (Miller) 28*, 29
Hannah 28
James 28
Jonas 28
Lydia 28
Margaret 28
Mary 28
Thomas 29
HARBARD, Eleanor (——) Pope-Miller 25
Elizabeth George, 25
Henry 25
HAWKIN, HAWKYN, Beatrix 37
Edward 37
Elizabeth 37
George 2, 5, 12, 38, 41, 45
Mary (Miller) 2, 12, 37
HAWKINS, Alice 2
Edward 40, 41
George 2
Grace 2
Mary (Miller) 2
Thomas 2
HAWKSHEAD, Ann (——) 8
Mary 8
HEATH, Elder 10
Eliz. (Miller) 4
Elizabeth (Miller) xi, 3, 4, 8, 9*, 11*, 12, 13*, 17*
Elizabeth 10, 12, 13, 14, 15, 16*

* Indicates more than one reference.

Hannah 6, 9, 11, 17
Isaac 6*, 7, 9*, 14, 17, 19
Martha 6, 10, 11
Mary 6, 9, 10, 11, 17
Mary (Cramphorne) 6, 9, 10, 11, 13
Peleg 6, 9, 10, 11
William 9, 10*, 11, 13, 14
Wm. 10
HICKS, Susan 10
HOAR, George Frisbie 32
Ruth Ann (Miller) 32
HOWE, Almira (Lyon) 32
Charlotte 32
Wm. 32

JARDFIELD, Elizabeth ix
JERNEGAN, Bridget ix
Thomas ix, 38
JONES, Anne (Burnap) Wight-Bullard 7

KEYES, Mary (Miller) 29
Thomas 29

LEAVITT, Edward Hart 32
Edwin 32
Hart 32
Joshua 32
Mary (Miller) 32
Sarah Miller (Dickinson) 32
LEONARD, Abbie 32
Alice S. 32
Frances Hannah 32
Hannah Billings (Miller) 32
Lemuel 32
Mary Ware 32
William Miller 32
LYNDESELL, Mary 10, 40
LYON, Almira 33
Benjamin 33
Priscilla (Paine) 33
Wm. 23, 24

MARSHALL, Joan (Miller) 6
John 37
MCDOUGALL, Arthur R. 33
Charlotte Rowena (Miller) 33
MEAD, MEADE, Agnes 5
Edward 5
Elizabeth ix, 5, 38
Jane 5
John 5, 38
Linsell 40
Margaret 41
Margaritte 5
Mary 5
Richard 5, 41
Thomas 40
MORLEY, James 39
MORSE, Elizabeth (Park) 27
Joseph 27

NEWCOMEN, Tho. 40, 41
NICHOLS, Bethia Avery (Miller) 32
Dwight Miller 32
Thomas Spencer 32
Washington A. 32*
William Adams 32

PARK, Abigail 27
Abigail (Dix) 26
Abigail (Green) 27
Elizabeth 26
Elizabeth (Miller) 26
John 26*
Lydia (Lawrence) 27
Solomon 27
Thomas 26
PEPPER, Richard 46
PERRY, Ann (Newman) 10
John 10
Phoebe (Cramphorne) 10
POPE, Mary xi, 19, 24
Walter xi
PRIOR, Elizabeth 42
PYLSTON, Mary 2, 41
William 2

RICE, Alice Maria (Miller) 33
Wm. W. 33

SANGER, Isaac 27
Mary (Park) 27
SAVELL, William 12
SAWIN, Martha (Miller) 29
Samuel 29
SLEEPER, Marion E. 33
SLEETH, Lola MacDonald 33
SOUTHRICK, Sarah (Burnap) 18
SPARHAWKE, Nathaniel 24
SPRENGER, SPRAUNGE, Ellen 5
Richard 5, 38
STAFFORD, Johane 2
STOKES, Grace 23, 24
STOTESBURY, Robert 6

TENISON, E. M. xiii
Eva Mabel xiii
THURGOOD, Agnes 2, 38
Annis 38
Johan 1
John 1, 2, 38, 44
Nicholas 2, 38
Susan xi, 6, 15
TRAIN, Hannah 27

VEERE, Charles 45
Mary 45
Mary (Miller) 45

WARD, Ann 8, 41
Anne 13
WATERMAN, Margaret 7, 16
Margaret (Miller) xi, 4, 5, 6, 7, 8, 15, 18
Margaret (Miller) Stonard 46
Thomas 8, 11, 13, 18, 46
WHEELER, Beulah 29, 30
WILEY, Sarah 29, 30
WILLIE, Agnes 39
Joan 39
John 39

* Indicates more than one reference.

SPENCER MILLER

(Book plate of the author)

A LIST OF FAMILIES IN BISHOP'S STORTFORD AS REVEALED IN THE RECENT INDEX OF GLASSCOCK'S TRANSCRIPTION OF THE PARISH REGISTER OF ST. MICHAEL'S CHURCH FROM 1561–1771*

By Dr. Spencer Miller

Family Name	*Number of Mar.*	*Bap.*	*Bur.*
Abbot Abbot	3	15	7
Abell Abel	3	15	14
Adam	5	3	
Andrews Andrew	5	3	4
Angell Angel	8	19	13
Archer	13	13	7
Ashby Asheby	5	14	4
Ashlock	2	13	5
Aylet Ayley Ayliefe	11	18	17
Baker	9	4	2
Banes Baynes	1	16	2
Banks Bancks	4	9	6
Barber Barbour	1		7
Barnes	17	32	20
Barnard Bernard	15	28	20
Bacock Bawcock	12	20	7
Bayford Baford	15	16	12
Beamond	2	8	5
Bedwell	1	4	3
Bell	8	14	11
Bendish	1	6	3
Bennet Benet	15	17	23
Best	5	17	18
Bigge Bygge	1	8	6
Bingham Bingam	3	8	10
Bird	6	10	7
Bishop	2	3	2
Blakely		5	3
Boltwood Boultwode	11	15	5
Bond	2	8	2
Bore Boore	3	11	13
Bowyer Bower Boyer	25	52	50
Brand	4	10	5
Bret Brett	19	33	29
Britten Bretten	6	8	2
Brewer Bruer	5	2	2
Brittayne	3	5	2
Brocke Brooks	12	20	16
Brown Browne	21	23	18
Bull	22	44	28
Burge Burges	2	5	4
Burrel Burrell	3	4	2
Bush Bushe	22	33	31
Bygrave	2	6	1
Callidaye Callyday	4	6	4
Camp Campe	1	9	5
Calton Cawlton	2	4	3

*Baptisms from 1561–1662, Burials from 1561–1680, Marriages from 1561–1771.

Family Name	*Number of Mar.*	*Bap.*	*Bur.*
Casse Cass	5	2	2
Chandler Chanler	19	79	47
Cheny Cheany	8	7	7
Chippfield Chipperfeilde	3	6	3
Clarke Clerke	18	15	9
Cocke Cock	7	2	5
Cook Cooke	16	51	32
Crab Crabbe	13	26	27
Cramphorne	8	9	7
Croft Craft	1	10	2
Crouch Crowch	5	22	5
Curtis Curtice	5	12	11
Dane	5	3	5
Davis Davys	6	5	9
Denny Denney	5	6	6
Denison Denysen	2	20	7
Devenish	4	18	9
Disborough Disborow		5	2
Dixon	2	10	6
Dugard	9	13	14
Earle Earll	3	17	6
Elliott Eliat	3	3	5
Emerson Emmerson	4	14	6
Eve	8	12	6
Everit Everet	2	5	1
Feast	9	17	12
ffoster Foster	4	5	10
Freeman	6	9	8
French	4	14	14
Freshwater	9	18	12
Gary	3	13	12
Gib Gibbs	6	15	11
Gladwin Gladwyn	10	24	20
Glascock	3	10	2
Godfrey	4	9	4
Gold	1	6	5
Grave Graves	19	10	12
Grene Greene	10	21	14
Greenleaffe	1	3	3
Griggs Grigge	4	7	2
Grice Gryce	6	16	12
Gurnard	9	23	13
Gurson	5	15	7
Hall Halls	4	6	3
Hammond	6	15	10
Harlakendon		1	
Harlow Harloo	6	22	13
Hawkyn Hawkins	6	22	22
Harrison Harryson	6	4	7
Harvey Harvie	8	5	5
Hastler	4	6	7
Hill Hills	18	28	24
Hitcherson Hutcherson Hutchenson	1	8	1
Holdgate Holgate	6	15	12
Hone Hoane	1	13	4
Hodge	5	5	5
Hodgekin Hodgkyn	4	13	12
How Howe	3	13	6

Family Name	*Number of Mar.*	*Bap.*	*Bur.*
Isaac Isac Isack	3	5	4
Jacob Jacobbe	8	11	18
Jardfeild Jarfeild	2	10	6
Jenninges Jemmynge	12	8	8
Jernigan Jernyham	2	9	4
Jewet Jewett Juet	6	2	3
Jones Johnes Joanes	11	30	15
Joslyn Jocelyn	1	14	7
King Kyng	14	21	15
Knight	3	9	6
Lambert Lambard	4	9	8
Lawe	5	1	2
Leafe	4	24	8
Little Litteler	5	8	11
Lucas	2	6	3
Lucke	1	7	4
Manning	6	13	9
Marden	18	45	39
Marrion	3	3	9
Marshall	5	6	14
Machin Matchin	5	9	5
Mathew Mathue	20	58	37
Mitchell	2	6	2
Miller Meller Myler	15	62	42
Milton	10	25	9
Milles Mills	15	13	14
Moulton Molton	2	8	4
Mumford Monford	12	11	12
Monk Monck	5	12	9
Morley	7	15	9
Nayler Naylor	3	12	3
Newman	7	11	11
Nichols Nicholls	4	14	17
Nook Noke	7	5	9
Noone	2	16	11
Osborne Osburne	11	18	10
Oswall Oswell	3	13	13
Palmer	6	19	16
Parker	13	7	5
Pasfield	3	13	4
Paxson Paxton	3	4	1
Paine Payne	13	25	25
Pearson	13	27	13
Perry	13	3	11
Pettit	7	7	2
Phillips	9	10	10
Piggott	1	7	
Pigram	1	4	2
Plum Plumbe Plommer	5	21	12
Prestland	1	10	7
Prior Pryor	6	2	10
Pylston Pilston	6	12	8
Ramsey Ramsy	10	25	21
Reynolds Raynold	13	26	10
Roberts	4	6	8
Reed Read Reade	17	36	46
Robinson	7	2	3
Rowell Rowley	5	19	15

Family Name	*Number of Mar.*	*Bap.*	*Bur.*
Ruggells	1	6	1
Russell	6	15	8
Sabin Sabyn	11	18	8
Salmon Samon	6	8	5
Sanders Saunder	4	13	14
Savell Savil	9	13	13
Sawyer	2	9	11
Scruby Srooby		4	2
Shepheard Shepperd	5	10	6
Shuckford	4	6	2
Shuttleton		5	2
Skingle Skingell	8	11	11
Smyth Smithe Smith	39	45	44
Snowe	2	6	6
South Sowthe	5	9	8
Stacy Stacie	4	4	1
Stock Stocke	9	7	2
Sweetings	8	22	14
Tayler Taylor	20	23	17
Tendering Tendring		3	6
Thorne	8	10	4
Thurgood Thorowgood Thoroughgood	13	15	10

Family Name	*Number of Mar.*	*Bap.*	*Bur.*
Tingie Tingy	3	7	7
Townsend	8	19	15
Trappe Trapes	7	11	6
Turner	7	4	3
Tyler	9	8	8
Vinton Vynton	10	14	10
Wall	12	19	13
Walter Walters	1	2	1
Warman	5	35	19
Warner	10	6	13
Warren	4	4	11
Water Waters	7	13	11
Waterman	6	8	3
Waynewright	1	1	1
Web Webb	7	11	8
Wyllie Welley Willie	6	7	9
West	9	19	9
Westwood	8	20	9
White	18	14	16
Wiburd Wyberd	11	10	10
Wilsemere Willesmer	12	10	4
Wilson	9	9	7
Wood	35	27	34
Wright Write	22	5	10

3 9999 06664 494 7